User Manual

TRIPLETT

CFM400

Large Vane CFM/CMM Thermo-Anemometer

Introduction

Congratulations on your purchase of the Triplett Model CFM400 Large Vane Airflow Anemometer.

This instrument measures Air Velocity, Air Flow (volume), and Air Temperature. The large, easy-to-read backlit LCD includes primary (upper) and secondary (lower) displays plus numerous status indicators.

CAUTIONS

Improper use of this meter can cause damage to the meter and personal injury. Read and understand this user manual before operating the meter.

Inspect the condition of the probe and the meter for any damage before operating the meter. Repair or replace damage before use.

If the equipment is used in a manner not specified by the manufacturer, the protection provided by the equipment may be impaired.

This device should not be made available to children. It contains hazardous objects as well as small parts that can be accidentally swallowed. The meter's batteries and packing material can also be dangerous to children.

In the event that the meter is to be unused for an extended period of time, remove the batteries to protect against battery leakage.

Expired or damaged batteries can be hazardous if allowed to come in contact with skin. Use suitable hand protection in such cases.

Do not short circuit batteries or put batteries in fire.

Descriptions

Meter Description (front)

1. Top line LCD display reading
2. Bottom line LCD display reading
3. U/mode AVG and up arrow button
4. L/mode and down arrow button
5. ON-OFF (Power) and SET button
6. HOLD, MAX-MIN, and left arrow (Enter) button
7. Unit of measure symbol for lower display row
8. Unit of measure symbol for upper display row
9. Air Velocity Vane

Meter Description (rear)

1. Air temperature sensor
2. Battery compartment

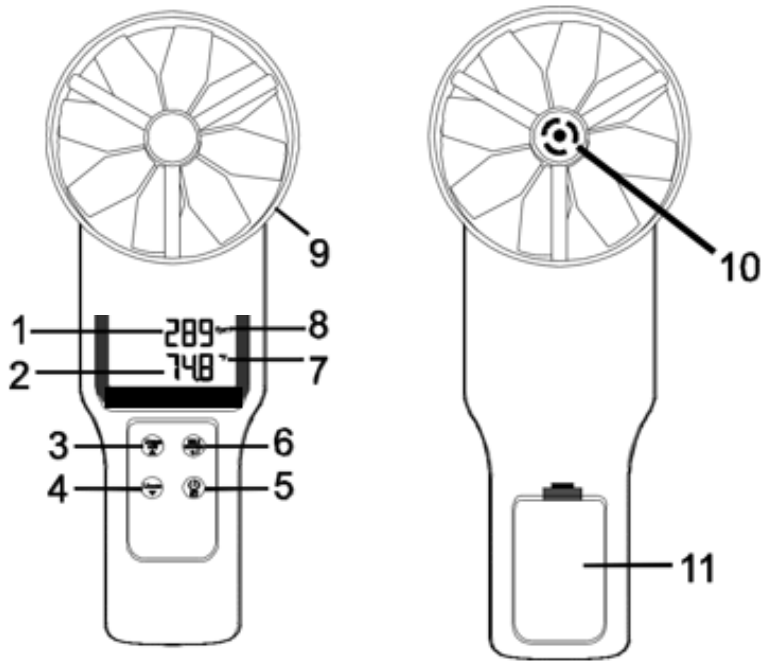

Keypad Description

Press momentarily to switch the meter ON or OFF. Press and hold this button for 2 seconds to enter or exit the Setup mode (refer to SETUP mode section for details).

HOLD
MAX/MIN

- Press momentarily to freeze the displayed reading (HOLD icon switches ON); press
- again momentarily to exit the HOLD mode (HOLD icon switches OFF)
- Press <u>and hold</u> for 2 seconds to display the MIN (minimum) reading; press and hold
- again to display the MAX (maximum) reading; Press and hold a third time to exit
- This button is also used in the AVERAGE mode (for recording readings one at a time or for a 'timed' recording session) and in the SETUP mode (for configuring the meter). Please review the AVERAGE and SETUP mode sections for details

U/mode
AVG
▲

Press and hold for 2 seconds to access the Multi-Point Average and Timed Average modes (the AVG icon switches ON). Detailed instructions for these modes are provided later in this guide). In the Setup mode press to select a category or to increase a value (refer to SETUP mode section)

L/mode
▼

Press to toggle the lower display between air temperature and air volume readings; Also used in the Multi-Point Average, Timed Average, and Setup modes; refer to the AVERAGE and SETUP modes sections later in this guide

+ U/mode AVG ▲

With the meter switched OFF, press and hold these two buttons to disable Auto Power OFF. Detailed AUTO POWER OFF (Sleep mode) instructions are provided later in this guide

Display Description

1. Lower Display digits (air volume, air temperature, timer, or menu parameter displays)
2. Upper Display digits (air velocity or menu display parameters)
3. Optional Cone and Funnel attachment icons
4. Units of measure for duct area programming
5. Vane indicator (flashes very briefly on power up)
6. Display HOLD icon
7. MAX mode icon
8. MIN mode icon
9. Recording icon
10. Elapsed Timer icon
11. AVG mode icon
12. Battery status icon
13. Unit of measure icons*

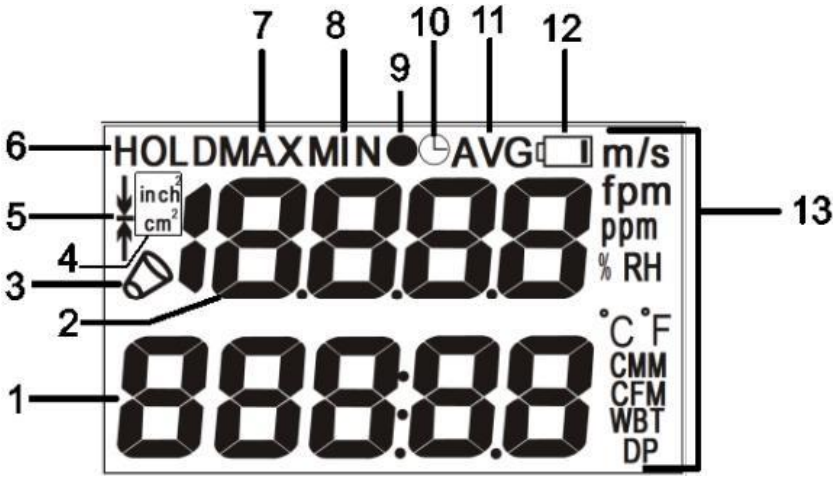

**Full list shown. Available units of measure icons vary by model.*

Operation

Air Velocity, Volume, and Temperature Measurements

1. Switch the meter ON by pressing the **POWER** button momentarily. Press the **POWER** button again to switch the meter OFF.

2. Note that the meter will automatically enter the sleep mode after 20 minutes of inactivity. To disable this feature: with the meter OFF, press and hold the **POWER** and the **U/mode** buttons for 2 seconds. The LCD will display '**n**' as the meter switches ON. Now the sleep mode is disabled and the user must press the **POWER** button momentarily to switch the meter OFF.

3. When the meter is ON, the air velocity reading is displayed on the upper display digits in meters per second (m/s) or feet per minute (fpm). The lower display area can show Air Volume (CMM/CFM) or Air Temperature (°C/°F) readings, use the **L/mode** button to toggle between the two. Note that an area measurement must be programmed into the meter (in the SETUP mode) before accurate volume measurements can be made.

4. Place the meter's vane in the air stream. The air must enter the vane from the rear of the meter. The temperature sensor is located at the center of the vane on the rear of the meter.

5. Read the measurement data on the LCD.

6. To change between Imperial and Metric units of measure refer to the SETUP mode section.

7. To measure the Air Volume of a duct, first measure the duct's area (see the Appendix for area calculations) and then enter the area value in the meter's SETUP mode in in^2 or cm^2. After the area value has been entered, press the **L/mode** button to switch the lower display from Air Temperature to Air Volume. Place the meter in the air stream to measure volume.

8. Optionally, measure Air Volume with an airflow cone adaptor by first attaching one of the adaptors to the meter (the optional cone adaptor kit includes a round and a square cone; kit part number CFM400-C). The meter will automatically recognize the adaptor and the cone icon will appear on the display

   Note: regardless of the AREA setting in the SETUP mode, the meter will default to the dimensions of the vane opening. Ensure that the airflow adaptor is well mounted and locked before taking measurements.

LCD backlight

Press the U/mode button to switch ON the LCD backlight. The backlight will automatically switch OFF after approximately 10 seconds to conserve battery power. Note that the backlighting switches ON automatically when the meter is switched ON by the user.

Data Hold Mode

1. Press the **HOLD** button from the normal operating mode to freeze the current measurement.

2. The 'HOLD' icon will appear at the top of the LCD display.

3. Press **HOLD** again to return to normal operation. The 'HOLD' icon will switch OFF and the meter will return to displaying readings in real time.

MAX/MIN Mode

The MAX-MIN feature records the highest (MAX) and lowest (MIN) readings captured since the meter was switched ON.

1. Press and hold the **MAX/MIN** button for 2 seconds to begin displaying the lowest (minimum) readings encountered since this mode was accessed. The 'MIN' icon will appear at the top of the LCD display indicating that the readings shown are the lowest measured.
2. Press and hold the **MAX/MIN** button again for 2 seconds to display the maximum readings encountered. The 'MAX' icon will appear on the LCD.
3. Press and hold this button again for 2 seconds to return to the normal mode of operation
   (the 'MIN' and 'MAX' icons should switch OFF).
4. While viewing the MAX or MIN data, use the **L/mode** button to switch the display so that the Air Volume MIN and MAX readings can be viewed also.
5. Press and hold **MAX/MIN** for 2 seconds to return to the normal operation mode.

Multi-Point Average Mode

1. From the normal operating mode press the **U/mode** button for 2 seconds to enter Multi-Point Average mode (the AVG display icon and the associated black dot • will switch ON).
2. Press the **HOLD** button momentarily to record one reading. The upper display digits will show the reading's memory location number and the lower display will show the measured value. Press the **HOLD** button again to take and store another reading; the memory location number will increment by one and the current reading will be stored in this new memory location. The meter can store up to 19,999 points in memory.
3. Press **U/mode** momentarily to see the multi-point mean (average) for all of the readings recorded during the session (the '•AVG' display icon will flash during this process).

4. Press **L/mode** to view the average reading for the other available parameters.
5. Press **U/mode** momentarily to return to the normal operating mode.

Timed Average Mode

1. From the normal operating mode, press and hold the **U/mode** button for 2 seconds to enter the Multi-Point Average mode first and then press **U/mode** one more time momentarily to enter the Timed Average Mode (the AVG and the elapsed timer icons will switch ON).
2. Press **HOLD** to begin recording. The elapsed timer starts (as shown on the upper display digits) and the clock icon flashes on and off. The longest amount of time the meter can operate in Timed Average Mode is 19,999 seconds.
3. Press **U/mode** to stop the clock and to calculate the timed average. The upper LCD will display the elapsed time and the lower LCD will show the averaged readings. The LCD will flash the 'AVG' and the elapsed timer icons.
4. Press **L/mode** to view the average for other available measurements.
5. Press **U/mode** to return to the normal operating mode.

Setup Mode

Entering Setup Mode

Press and hold the **SET** button for 2 seconds to enter Setup mode. Two options are available:
P1.0: Unit and P2.0: AREA.

Use the **up/down** buttons to toggle between P1.0 UNIT and P2.0 AREA options.

P1.0: Unit Selection

1. Once in setup mode, at the P1.0 UNIT display, momentarily press the **HOLD** button to enter the P1.0 UNIT menu.
2. Use the down/up **arrow** buttons to switch between metric and imperial units. The available units are: air velocity (m/s, fpm), temperature (C, F), air volume (CMM, CFM), and area size (cm^2, $inch^2$).
3. Press **HOLD** momentarily to return to the P1.0 display.
4. Press either **arrow** button to move to the P2.0 AREA option and follow the steps below.

P2.0: Area Size Selection (enter square inches or square centimeters)

1. In setup mode, from the P2.0 AREA display, press **HOLD** to enter the AREA setting menu. The LCD will show '99999' in the lower display with the left-most digit flashing.
2. Use the **up arrow** button change the flashing digit (from 0 through 9).
3. Use the **down arrow** button to move to the next digit. Use the **up arrow** button again to change the flashing digit. Continue in this way until the desired AREA value is displayed.
4. Press the **Hold** button again momentarily to store the value and to return to the P2.0 display.
5. Press and hold the **POWER SET** button for 2 seconds to return to the normal operating mode.

Battery Replacement

When the low battery icon appears on the LCD, the four (4) 1.5V 'AAA' batteries must be replaced.

1. Open the rear battery compartment by carefully pulling down on the compartment's latch.
2. The battery compartment cover should be completely removed before proceeding.

3. Replace the four (4) 1.5V ‘AAA’ batteries ensuring proper polarity.
4. Close the battery compartment before attempting to use the meter.

Never dispose of used batteries or rechargeable batteries in household waste. As consumers, users are legally required to take used batteries to appropriate collection sites, the retail store where the batteries were purchased, or wherever batteries are sold.

Disposal: Do not dispose of this instrument in household waste. The user is obligated to take end-of-life devices to a designated collection point for the disposal of electrical and electronic equipment

Other Battery Safety Reminders

1. Never dispose of batteries in a fire. Batteries may explode or leak.
1. Never mix battery types. Always install new batteries of the same type.

Specifications

Air Velocity	**Range**	**Resolution**	**Accuracy**
m/s (meters per second)	0.2 - 30 m/s	0.01 m/s	± (1.5% rdg + 0.3 m/s)
fpm (feet per minute)	40 – 5900 fpm	1 fpm	± (1.5% rdg + 59 fpm)
Air Flow (Volume)	**Range**	**Resolution**	**Area Range**
CMM (cubic meters/min)	0-99999 m^3/min	0.1 up to 9999.9 then 1.0	0 to 99999cm^2
CFM (cubic ft/min)	0-99999 ft^3/min	0.1 up to 9999.9 then 1.0	0 to 99999in^2
Air Temperature	**Range**	**Resolution**	**Accuracy**
^oC/F	-20 to 60^oC (-4 to 140^oF)	0.1^oC/F	±0.6°C (-20 to 50°C) ±1.2°C (51 to 60°C) ± 1.1°F (-5 to 122°F) ± 2.2°F (123 to 140°F)

Circuit	Custom LSI microprocessor
Display	Dual function 13 mm (0.5") 4-digit LCD
Sampling rate	1 reading per second approx.
Air velocity/flow sensor	Conventional angled vane arms with low-friction ball bearing
Temperature sensor	NTC-type precision thermistor

Automatic Power off	Auto shut off after 20 minutes to preserve battery life (sleep mode)
Operating Temperature	0°C to 50°C (32°F to 122°F)
Storage Temperature	-10 to 50°C (14 to 122°F)
Operating Humidity	<80% RH
Storage Humidity	<90% RH
Operating Altitude	2000 meters (7000ft) maximum
Battery Power	Four (4) 'AAA' 1.5V batteries
Battery Life	> 40 hours
Battery consumption	8.3 mA DC (approx.)
Weight	725g (1.6 lbs.) including battery and probe
Dimensions	Main instrument: 269 x 106 x 51mm (10.6 x 4.2 x 2") Vane inner diameter: 100mm / 3.94 inches Optional Air Flow Adaptors: Round cone: 210mm (8.3") Diameter Square: 346 x 346mm (13.6 x 13.6")

Error Messages

Error codes and solutions

Air Temperature

E02: Temperature reading is lower than the low range limit. Place the meter in room temperature for 30 minutes. If E02 continues, send the unit to Triplett for repair.

E03: Temperature exceeds the high range limit. Place the meter in room temperature for 30 minutes. If E03 continues to appear, send the unit to Triplett for repair.

E31: The A-to-D converter requires replacing. Send the meter to Triplett Instruments for repair.

Air velocity

E03: Velocity exceeds the high range limit. Test the meter using an air velocity that is known to be within the specified range limits. Send the unit to Triplett for repair if the E03 error message persists.

Air volume

E03: Reading exceeds the meter's display limit. Check that the AREA setting is correct in the Setup Mode.

E04: Air velocity error. Return the meter to Triplett if the error message persists.

Other Errors

E32: Memory IC error. Reboot the meter and check it again; send it to Triplett Instruments for repair if the error message persists.

No display

1. Check that the batteries are making good contact and are aligned for correct polarity.

2. Replace batteries.

Display switches OFF automatically

This symptom could be the normal 'Sleep Mode' which switches the meter OFF after 20 minutes of in-activity. If this is not the 'Sleep Mode', check whether the low battery indicator appears before the LCD attempts to switch ON; if yes, replace the batteries.

Appendix: Useful Equations and Conversions

Area equation for rectangular or square ducts

Area (A) = Width (W) x Height (H)

Area equation for circular ducts

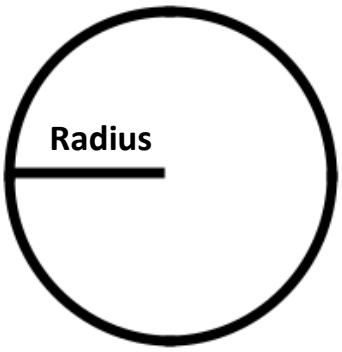

Area (A) = pi x r^2

Where pi = 3.14 and r^2 = radius x radius

Cubic equations

CFM (ft^3/min) = Air Velocity (ft/min) x Area (ft^2)

CMM (m^3/min) = Air Velocity (m/sec) x Area (m^2) x 60

NOTE: Measurements made in *inches or centimeters* must be converted to *feet* or *meters* before using these formulae.

Unit of Measure Conversion Table

	m/s	ft/min	knots	km/h	MPH
1 m/s	1	196.87	1.944	3.6	2.24
1 ft/min	0.00508	1	0.00987	0.01829	0.01138
1 knot	0.5144	101.27	1	1.8519	1.1523
1 km/h	0.2778	54.69	0.54	1	0.6222
1 MPH	0.4464	87.89	0.8679	1.6071	1

Warranty

Triplett / Jewell Instruments extends the following warranty to the original purchaser of these goods for use. Triplett warrants to the original purchaser for use that the products sold by it will be free from defects in workmanship and material for a period of (1) one year from the date of purchase. This warranty does not apply to any of our products which have been repaired or altered by unauthorized persons in any way or purchased from unauthorized distributors so as, in our sole judgment, to injure their stability or reliability, or which have been subject to misuse, abuse, misapplication, negligence, accident or which have had the serial numbers altered, defaced, or removed. Accessories, including batteries are not covered by this warranty

Copyright © 2021 Triplett