ADT680A/680P Digital Pressure Gauges
ADT680AEx/680PEx/601Ex Digital Pressure Gauges

Quick Start Guide

[Version: 2403V01]

Safety Instructions

Warning indicates conditions which may cause injury to operator;

Note indicates conditions which may damage the pressure gauge or impact the calibration result.

Warning:

To prevent the user from injury, please follow this user manual for use.

To prevent fire, electric shock, or personal injury, please do as follows:

1. General:

The pressure medium should be verified before use. Please adhere to the following instructions:

- ◆ Please read the user manual before using the product, especially the “Safety Instructions”.
- ◆ Before using the product, please check the appearance of the product to ensure there is no damage.
- ◆ Please refer to the operation steps in the manual when using the product.
- ◆ Please be sure to store, transport and use this product in the correct direction.
- ◆ If the product is damaged or malfunctions, please do not use it and contact Additel.
- ◆ Never use the non-Ex product in an explosive, steam, or dust environment.

2. Electrical:

- ◆ Before using the product, please make sure that the power supply is properly connected.

Attention:

To prevent injury, please carefully follow the instruction manual for use.

To prevent damage, please do as follows:

- ◆ Do not use the instrument in a high vibration environment.
- ◆ If the gauge is behaving abnormally, please stop using it and contact Additel.

Intrinsically Safe Information

ADT680AEx/680PEx/601Ex have intrinsically safe certification:

1.IECEx&ATEx:

Ex II1G

Ex ia IIC T4 Ga

Ta=-20℃to+50℃

IECEx CSA 23.0046X

CSANe 23ATEX1214X

2.CSA:

Class I, Division 1,Groups A,B,C and D,T4

Class I, Zone 0,AEx ia IIC T4 Ga

CSA 24CA 80172346X

Ex ia IIC T4 Ga

Ta=-20℃to+50℃

Basic Structure

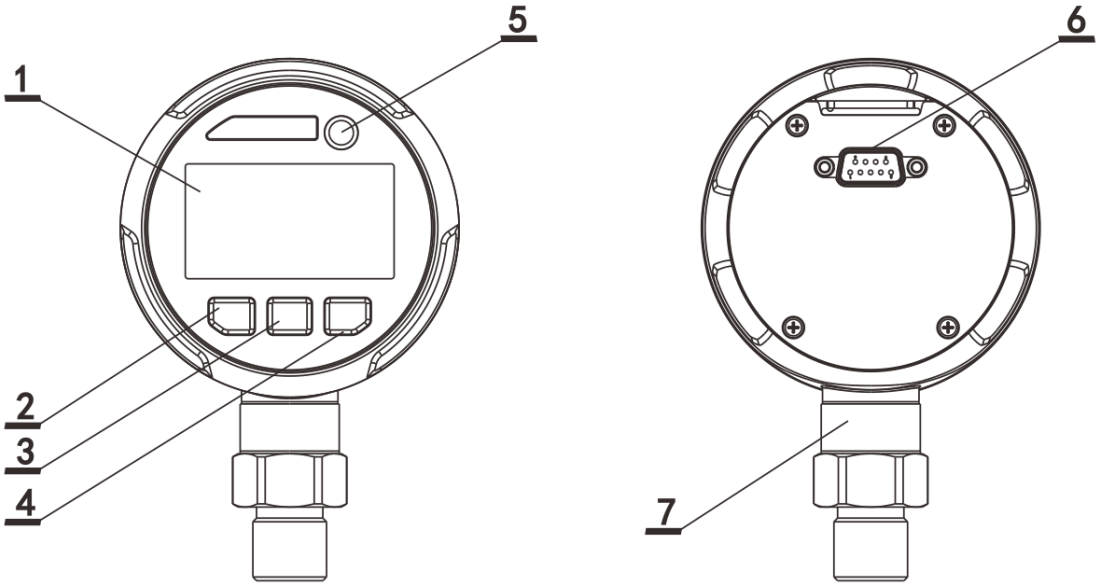

Basic structure of ADT680A/680AEx/601Ex

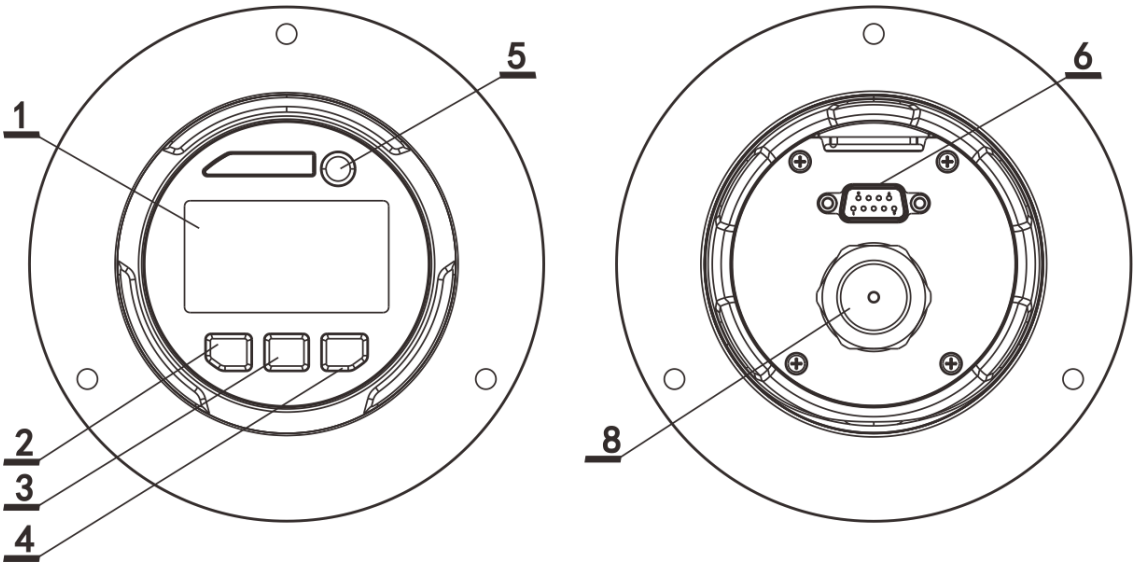

Basic structure of ADT680P/680PEx

Basic structure list

No.	Name	Description
1	Display	Show pressure, menu…
2	Units button	Short press: switch units in main display, move to right, “return” Long press: go to Settings in main display
3	Backlight button	Short press: backlight on/off in main display or move downward. Long press: view peak values in main display
4	Zero button	Short press: pressure zero in main display, or “Confirm.” Long press: Bluetooth on/off in main display
5	Power button	Short press: Unlock, functions as “return” when in number input or menus. Long press: to power on/off
6	Communication	RS232 or empty
7	Pressure sensor	Integrated with the gauge
8	Pressure module	Digital pressure module, removable

RS232 DB9 Female pins description

Pins	Description
1, 4, 6, 7, 8, 9	Reserved
2	TXD
3	RXD
5	GND

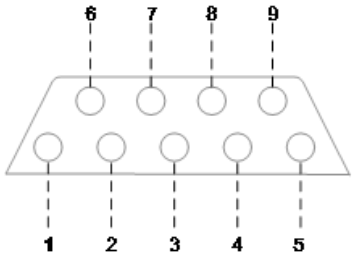

RS232 DB9 Female pins description diagram

Warning:

Any data communication devices connected to the ADT680AEx/680PEx/601Ex shall be approved SELV or Class 2 equipment against IEC 60950 or an equivalent IEC standard. The maximum voltage Um from the device shall not exceed 16 Vdc for RS232 port.

Power Supply

1. ADT680A/680P: Power can be supplied by 3*AA(LR6) battery or 9814 RS232 power supply communication kit (Optional).

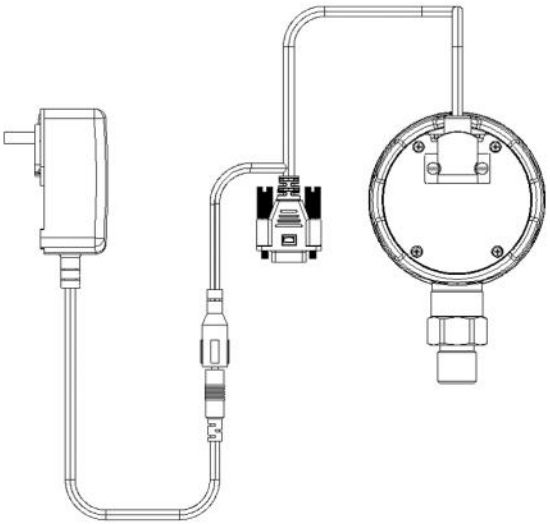

ADT680A/680P adapter diagram

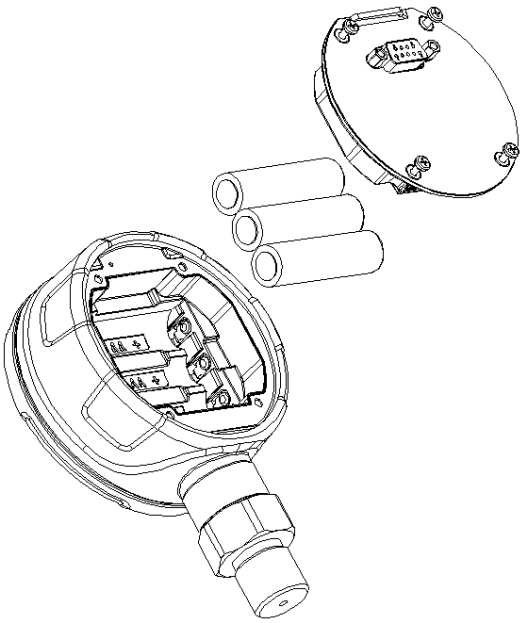

ADT680A/680P battery installation

Warning:

- ◆ When using battery as power supply, please replace batteries if a low battery is indicated.
- ◆ When replacing the battery, please note the direction of battery electrodes.

2. ADT680AEx/680PEx/601Ex: Only use approved battery models (see below)

ADT680AEx/680PEx/601Ex battery installation

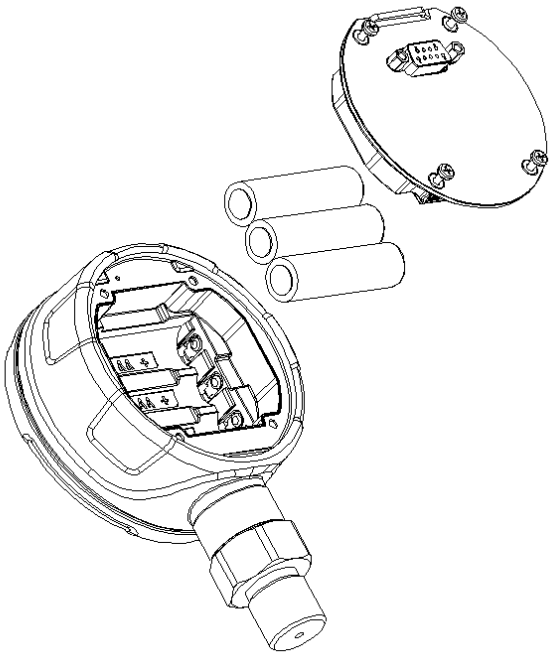

Approved battery models:

Manufacturer	Type	Ta
ENERGIZER	E91	(-18~45)℃
Maxell	LR6	(-20~60)℃
Rayovac	815	(-30~55)℃

Warning:

◆ When using battery as power supply, please replace batteries if a low battery is indicated.

◆ When replacing the battery, please note the direction of battery electrodes.

◆ Never replace the battery in hazardous area.

◆ Use only the approved battery models.

Display and Buttons

1. Display and buttons description:

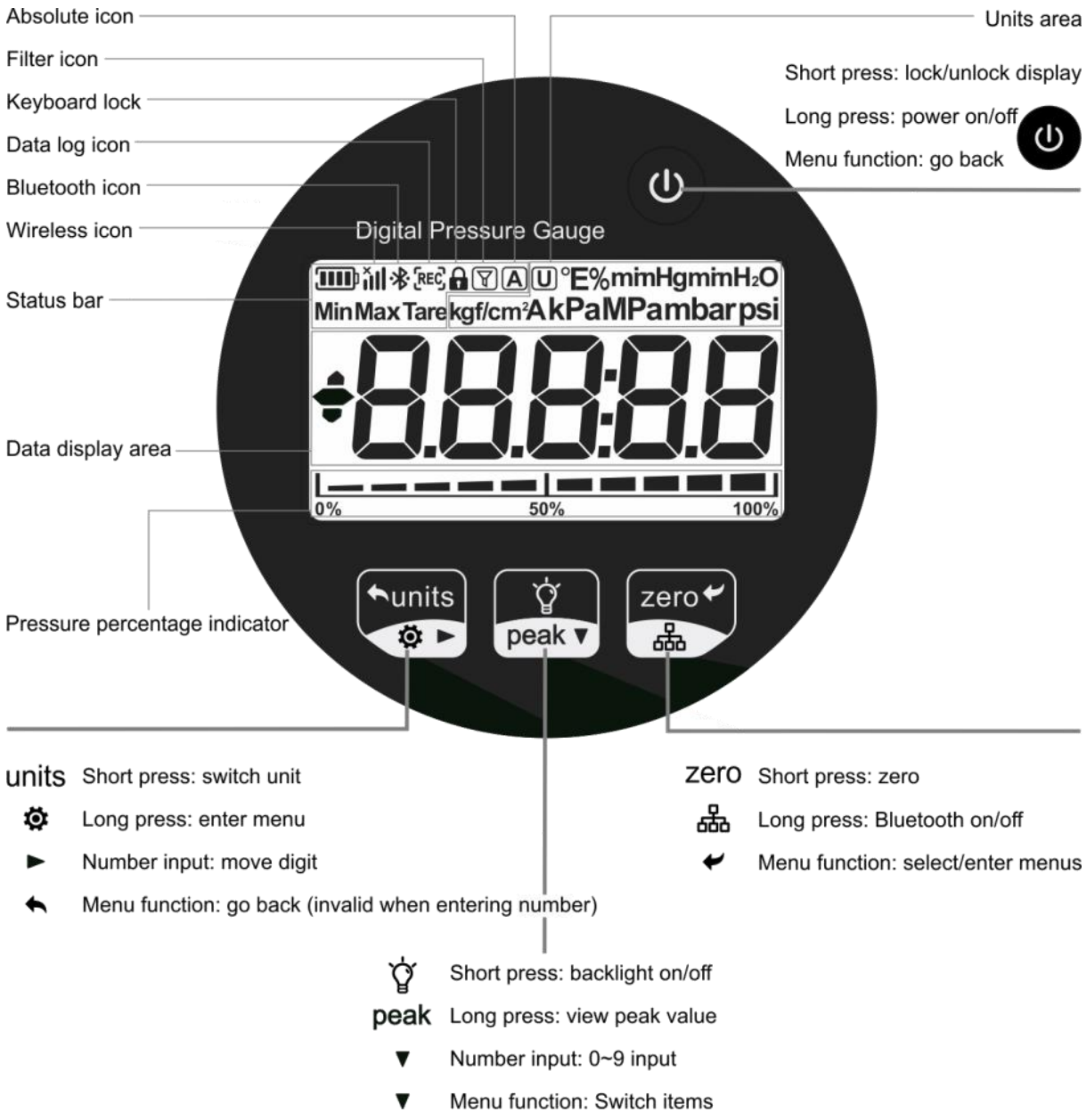

Display and buttons description

Menu Structure and Operation

1. Menu structure

Long press units to enter menu and start, please also refer to display and buttons description diagram.

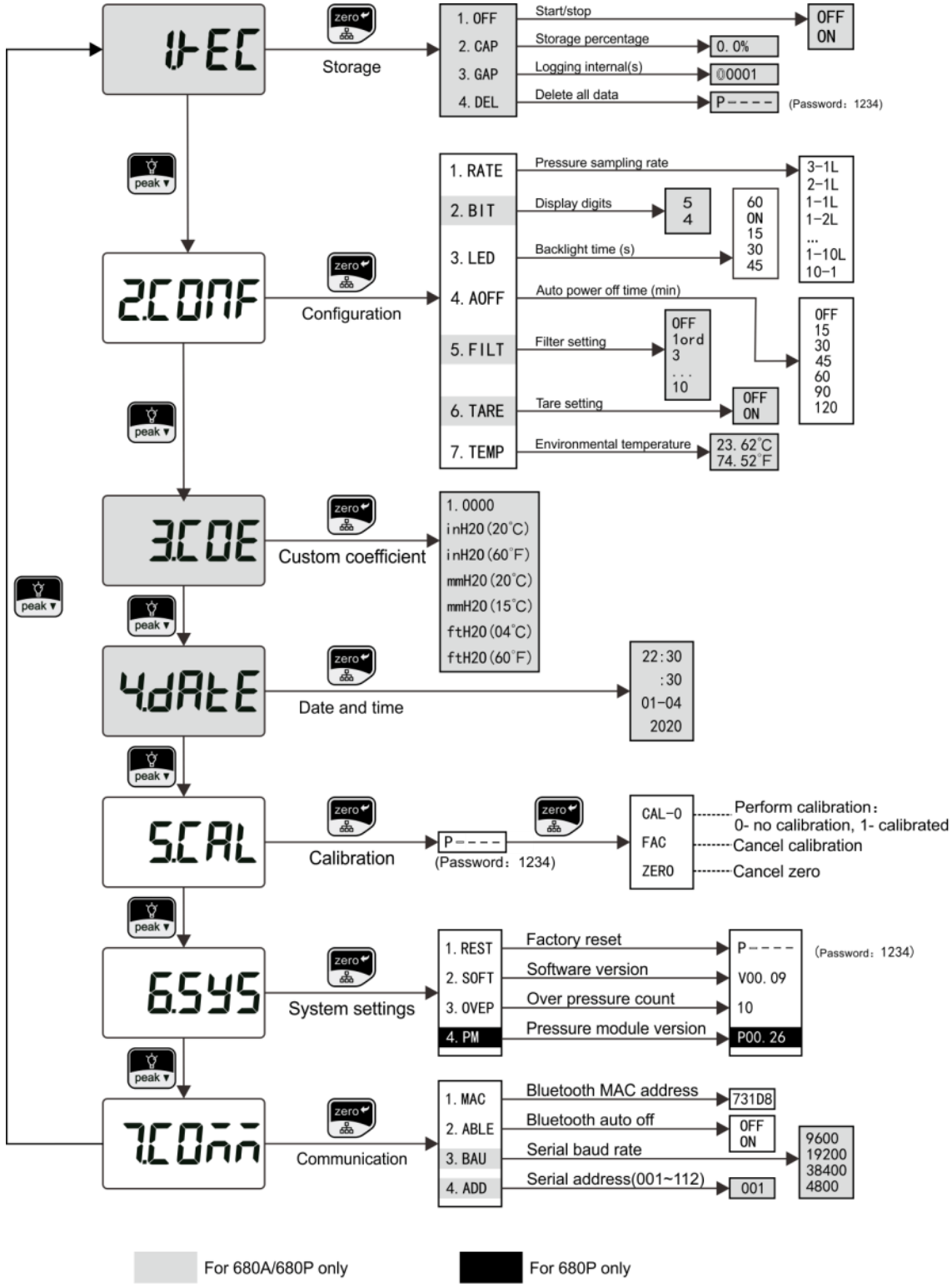

Menu structure

2. Basic menu operation

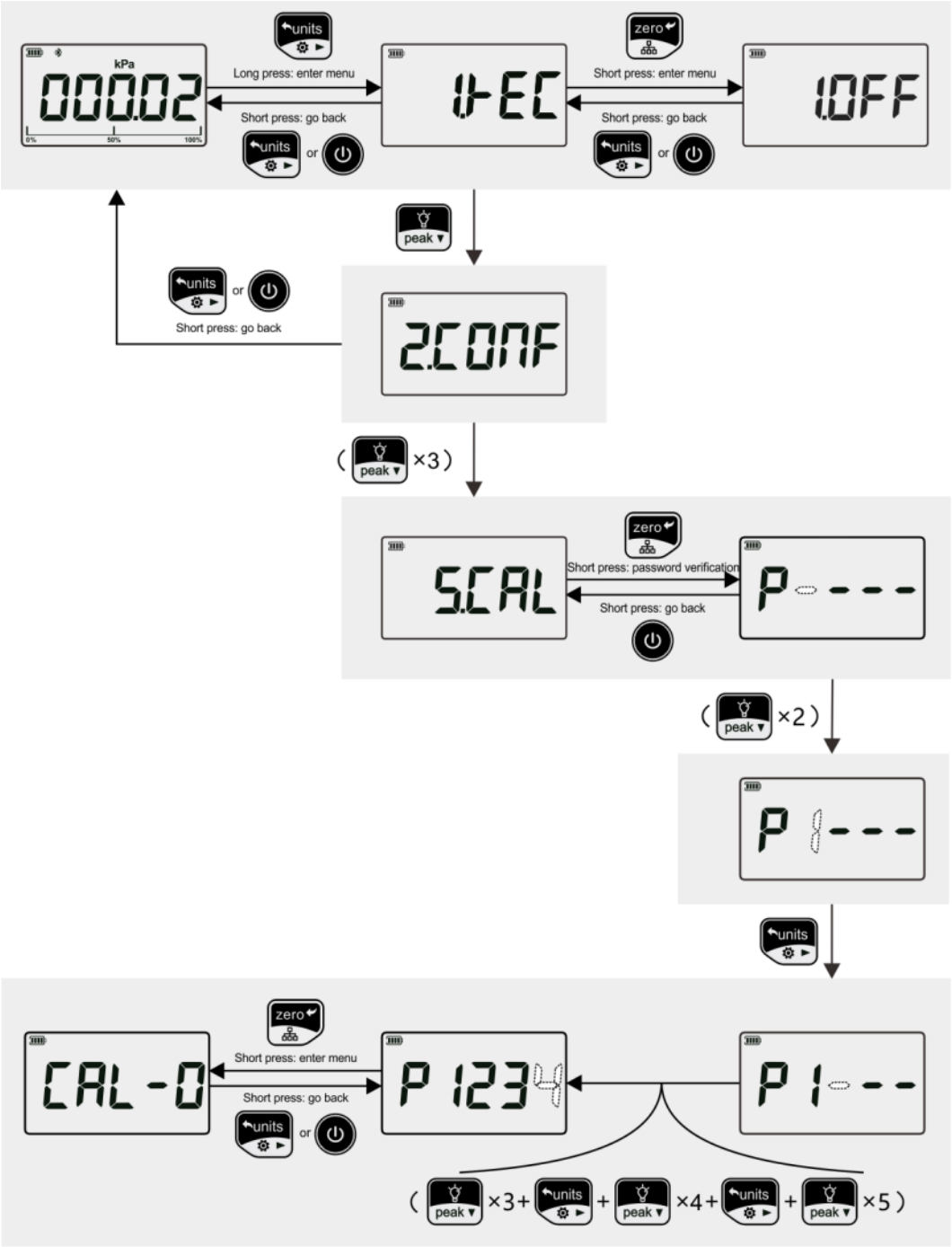

Basic menu operation

Error Code

Code	Description	Solutions
001	Wrong password	Check the password
002	Parameter over range	The entered value exceeds the range allowed by the pressure gauge, please enter a new value
003	Operation failed	Try again

Link App Connection

1. Scan the QR Code to Download Link App

Additel Link is a mobile app available on Android and iOS system. It can connect to pressure gauges through Bluetooth, display real-time pressure reading and status, configure gauge parameters, switch pressure units, pressure zero, start/stop data log, download and view data from the gauge, calibrate pressure gauges and export CSV data for sharing.

2. Enable the Bluetooth

Check and make sure the Bluetooth of the cell phone is enabled, then go to the gauge main display and long press Zero button to turn on/off the Bluetooth.

3. Connect to the Gauge

3.1 Scan the Code

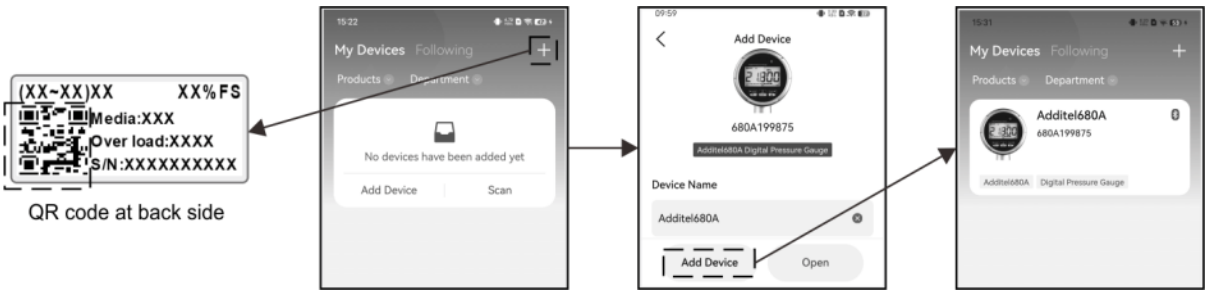

3.2 Manual Connection by Searching MAC Address

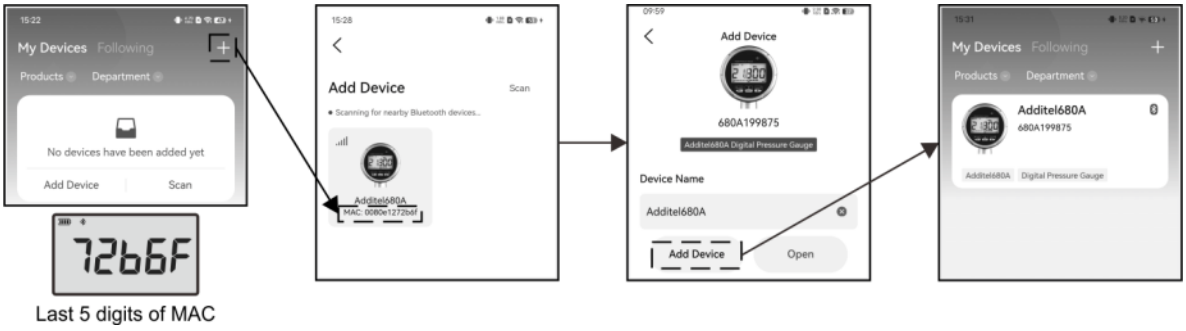

Calibration Example

Enter password “1234” to calibrate, complete the calibration by go to: lower limit calibration point -> show lower limit measured value -> upper limit calibration point -> show upper limit measured value.

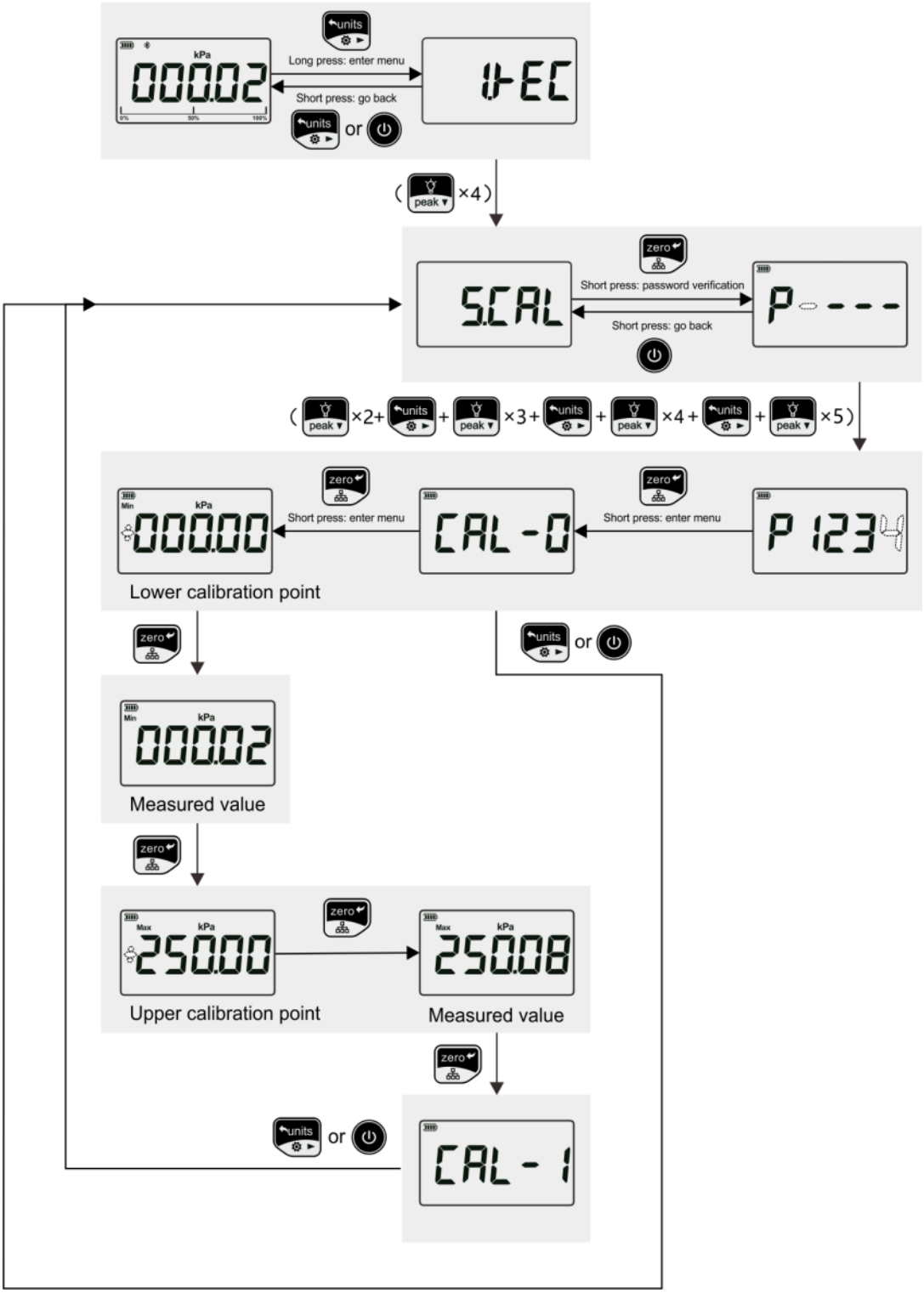

Calibration example

Metrology Made Simple

Statement

The product technical specifications, accessories and other related information in this manual are subject to change without prior notice. Please contact Additel Corporation if you have any questions.

Download User Manual

1.800.561.8187 www.itm.com information@itm.com