Additel

Metrology Made Simple

ADT680A, ADT680P, ADT601EX Calibration Manual

ADT680A, ADT680P, ADT601Ex
Calibration Manual

1.0 – Scope

The Additel ADT680A, ADT680P, and ADT601Ex series digital pressure gauges are all durable IP67 rated devices which are easy to use and maintain, making them perfect for field work. These gauges come in various ranges and accuracy at reasonable costs. For added protection in sensitive areas, intrinsically safe versions are also available. Please read this document carefully before attempting to perform any type of verification or adjustment. Also ensure that the operator has the metrological expertise and equipment to perform the work.

2.0 – References

- Additel 680A, 680AEx, 680P, 680PEx, and 601Ex User Manual
- Additel 773, 783, and 793 User Manual
- Additel 151 Digital Pressure Module Datasheet
- Additel 161 Intelligent Digital Pressure Modules Datasheet

3.0 – Recommended Equipment and Specifications

Equipment	Specifications	Recommended Model
Pressure Controller	Applicable to the ADT680A/680P/601Ex ranges	ADT773, ADT783, ADT793
Reference Standard Modules	Applicable to the ADT680A/680P/601Ex ranges	ADT151, ADT161
Manifolds	Applicable to the ADT680A/680P/601Ex ranges	ADT121, ADT123
Hoses	Applicable to the ADT680A/680P/601Ex ranges	ADT100-HTK's, etc.
Connection Cables	USB to RS 232 Adapter	9050

4.0 – Environmental Conditions

- Ideal Temperature and Humidity Conditions:
  - 23 ± 5°C with less than 80% relative humidity

Additel
1.800.561.8187 www.itm.com information@itm.com

5.0 – Diagrams and Descriptions

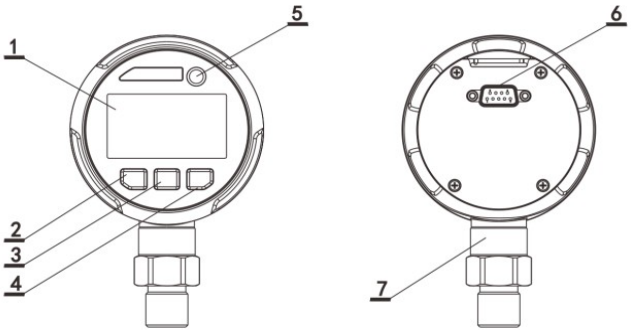

Diagram 5.1
(ADT680A &
ADT601Ex)

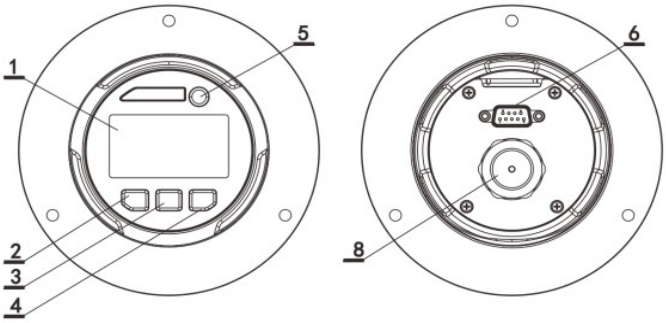

Diagram 5.2
(ADT680P)

No.	Part Name	Icon	Description
1	Display	/	Show pressure, menu……
2	Unit button	units	Short press: switch units in main display, move to right, "return"
			Long press: go to Settings in main display
3	Backlight button	peak ▼	Short press: in main display, backlight on/off; other menus, move downward
			Long press: view peak values in main display
4	Zero button	zero	Short press: pressure zero in main display, or "Confirm"
			Long press: Bluetooth on/off in main display
5	Power button		Short press: Unlock, functions as "return" when in number input or menus.
			Long press: to power on/off
6	Communication module	/	RS232 or empty
7	Pressure sensor	/	Integrated with the gauge
8	Pressure module	/	Digital pressure module, removable

Additel
1.800.561.8187 www.itm.com information@itm.com

6.0 – Calibration Procedure

6.1 – Date & Time

1) Turn on the gauge by pressing the button located near the top of the display.
2) Press and hold the button to open up the settings options.
3) Press the button three times to navigate to the **4.dAtE** row.
4) Press the button to view the time (24H format). If necessary, edit the time by pressing the button and adjust it using the and buttons. Press the button to confirm.
5) Press the button twice to view the date. If necessary, adjust the date.
6) Press the button once more to view the year. If necessary, adjust the year.
7) Press the button twice to return to the main pressure display.

6.2 – Gauge Exercise & Zero

6.2.1 – Exercise

1) Connect the gauge to the appropriate pressure system and ensure that all connections are sealed to prevent any pressure leakage.
   - NOTE: Please ensure that all equipment is rated to handle the maximum pressure of the unit under test.
2) Pressurize the system to the lower limit range of the gauge and allow it to stabilize for a sufficient amount of time. Additel typically allows 60 seconds of stabilization time.
3) Pressurize the system to the upper limit range of the gauge and allow it to stabilize for a sufficient amount of time.
4) Repeat the lower and upper limit exercise for an additional two cycles then vent the system when done.

Additel
1.800.561.8187 www.itm.com information@itm.com

6.2.2 – Zero

1) Vent the system for a sufficient amount of time to allow any trapped gas to escape.
2) Press the

button to manually zero the gauge before pressure verification.
   - The gauge should not be zeroed when in absolute pressure mode because doing so will add an offset to the test values.

6.3 – Pressure Verification

1) Connect the Unit Under Test - UUT (680A, 680P, or 601Ex) to the appropriate pressure system.
2) Ensure that the correct reference standards are being used for an acceptable TUR and the system is sealed properly in order to prevent any leakage.
3) Determine the test points for the appropriate range.
   - **Gauge pressure – GP** typically has 9 test points:

     (0%, 25%, 50%, 75%, 100%, 75%, 50%, 25%, 0%) max range,

     Example: GP100 test points are (0, 25, 50, 75, 100, 75, 50, 25, 0) psi
   - **Compound Pressure – CP** typically has 11 test points:

     (-13psi, -7.25psi, 0%, 25%, 50%, 75%, 100%, 75%, 50%, 25%, 0%) max range,

     Example: CP100 test points are (-13, -7.25, 0, 25, 50, 75, 100, 75, 50, 25, 0) psi
4) Source the correct amount of pressure for each test point.
5) Allow appropriate time for each test point to stabilize and record each measured value.
6) Compare the reference and UUT test values. Additel recommends maintaining less than 50% of tolerance.

Additel
1.800.561.8187 www.itm.com information@itm.com

6.4 – Calibration Adjustment

1) Hold the units button to access the settings menu.
2) Press the peak button four times until the display shows **5.CAL**.
3) Press the zero button and the unit will ask for the password.
4) Use the units and peak buttons to input the password to P1234 then press the zero button to confirm.
5) The display will now show either CAL-0 or CAL-1. CAL-0 indicates that a customer calibration has yet to be performed while CAL-1 indicates that a customer calibration has been previously performed.
6) Press the zero button to begin the calibration adjustment.
7) The unit will have either 3 or 2 calibration points depending on the range.
   - CP ranges have 3 calibration points: lower limit, zero, and upper limit
   - GP ranges have 2 calibration points: lower limit and upper limit
8) Set the lower limit using the peak and units buttons then press zero to confirm the value.
9) Source pressure for the lower limit value and allow sufficient enough time to stabilize. Press zero to confirm the lower limit calibration.
10) Set the upper limit using the peak and units buttons then press zero to confirm the value.
11) Source pressure the upper limit value and allow sufficient enough time to stabilize. Press zero to confirm the upper limit calibration.
12) The display will now show CAL-1, indicating that the calibration adjustment was successful.
13) Press the units button twice to return to the main pressure display.

Additel
1.800.561.8187 www.itm.com information@itm.com

14) Repeat the Zero procedure (6.2.2).

15) Repeat the Pressure Verification (6.3).

Additel
1.800.561.8187 www.itm.com information@itm.com