Ref No,500-57-2008-JAN

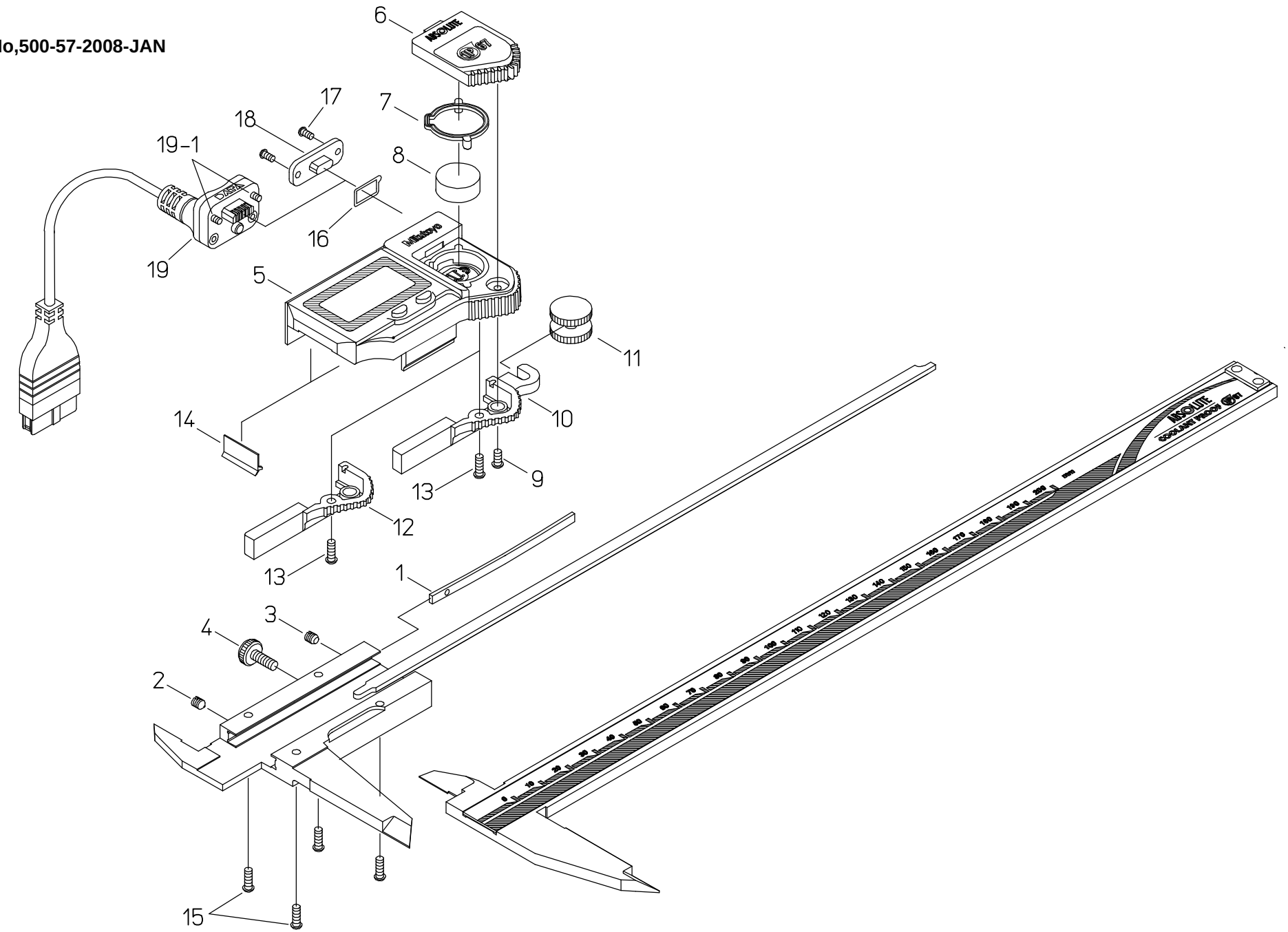

1.800.561.8187 www.itm.com information@itm.com

ブヒンメイ	PART NAME	販売区分 CATEGORY	CODE NO. コードNO. 500-703-10 CD-20PSX	500-707-11 CD-20PPX	500-713-10 CD-20PMX	500-717-11 CD-20PKX	500-753-10 CD-8"PSX	500-763-10 CD-8"PMX	備考 COMMENTS
ｲﾀﾊﾞﾈ	GIB, SLIDER		06ACA200						
ﾈｼﾞ､ｾｯﾄﾈｼﾞ	SCREW, GIB SETTING		05CAB037						
ﾈｼﾞ､ｵｼﾈｼﾞ	SCREW, GIB PRESSING		05CAB036						
ﾈｼﾞ､ｸﾗﾝﾌﾟ	CLAMP, SLIDER		541985						
ｺｮｳｼﾞﾓｼﾞｭｰﾙAssy	READING UNIT ASSY	Y	05SZA316A		05SZA315A		05SZA316B	05SZA315B	
ﾃﾞﾝﾁﾌﾞﾀ	COVER CELL		05SZA317						
ﾃﾞﾝﾁﾌﾞﾀﾊﾟｯｷﾝ	PACKING, COVER OF CELL		05SAA372						
ﾎﾞﾀﾝﾃﾞﾝﾁ	BATTERY		938882						
ﾈｼﾞ､ｼﾞｭｳｼﾞﾅﾍﾞｺ(M1.7×5)	SCREW, COVER OF CELL		05SAA379						
ﾌｯｸｰﾗ､ｱｰﾑ	HOOK, ROLLER		05CAB011	-	05CAB011	-	05CAB011		
ﾛｰﾗ	ROLLER		141771	-	141771	-	141771		
ﾖﾋﾞｶｹ	KNOB, SLIDER		-	05CAB012	-	05CAB012	-		
ﾈｼﾞ､ｼﾞｭｳｼﾞﾅﾍﾞｺ(ﾖﾋﾞ2×5.8)	SCREW, HOOK ROLLER		05CAA893						
ﾜｲﾊﾟｰ	WIPER	Y	198551						
ﾈｼﾞ､ｼﾞｭｳｼﾞﾅﾍﾞｺ(ﾖﾋﾞ2×10.5)	SCREW, READING UNIT ASSY	Y	05CAA926						
ｺﾈｸﾀﾊﾟｯｷﾝ	PACKING, CONNECTOR		-		09GAA374		-	09GAA374	
ﾈｼﾞ､ｼﾞｭｳｼﾞﾅﾍﾞｺ(M1.7×2.5)	SCREW, CAP CONNECTOR		-		09GAA376		-	09GAA376	
ｺﾈｸﾀｷｬｯﾌﾟ	CAP CONNECTOR		-		09GAA372		-	09GAA372	
【ｵﾌﾟｼｮﾝ】	【OPTION】								
ｾﾂｿﾞｸｹｰﾌﾞﾙ(1M)	CONNECTING CABLE(1M)		-		05CZA624		-	05CZA624	
ｾﾂｿﾞｸｹｰﾌﾞﾙ(2M)	CONNECTING CABLE(2M)		-		05CZA625		-	05CZA625	
ﾈｼﾞ､ｼﾞｭｳｼﾞﾅﾍﾞｺ(M1.7×6.5)	SCREW, CONNECTING CABLE		-		05CAA958		-	05CAA958	
【梱包資材】	【PACKING】								
ｹｰｽ､PPｹｰｽ	PP CASE		05RAB350						
ｹｰｽ､ｶﾗｰ(1ｺ)	COLOR CASE		06ADE892						