35-3001-01
Combustible Gas Sample-Draw Detector
Operator's Manual

Part Number: 71-0282RK

Revision: A

Released: 8/3/17

WARNING

Read and understand this instruction manual before operating detector. Improper use of the detector could result in bodily harm or death.

Periodic calibration and maintenance of the detector is essential for proper operation and correct readings. Please calibrate and maintain this detector regularly! Frequency of calibration depends upon the type of use you have and the sensor types. Typical calibration frequencies for most applications are between 3 and 6 months, but can be required more often or less often based on your usage.

Product Warranty

RKI Instruments, Inc. warrants gas alarm equipment sold by us to be free from defects in materials, workmanship, and performance for a period of one year from date of shipment from RKI Instruments, Inc. Any parts found defective within that period will be repaired or replaced, at our option, free of charge. This warranty does not apply to those items which by their nature are subject to deterioration or consumption in normal service, and which must be cleaned, repaired, or replaced on a routine basis. Examples of such items are:

a) Absorbent cartridges

b) Pump diaphragms and valves

c) Fuses

d) Batteries

e) Filter elements

Warranty is voided by abuse including mechanical damage, alteration, rough handling, or repair procedures not in accordance with the operator's manual. This warranty indicates the full extent of our liability, and we are not responsible for removal or replacement costs, local repair costs, transportation costs, or contingent expenses incurred without our prior approval.

THIS WARRANTY IS EXPRESSLY IN LIEU OF ANY AND ALL OTHER WARRANTIES AND REPRESENTATIONS, EXPRESSED OR IMPLIED, AND ALL OTHER OBLIGATIONS OR LIABILITIES ON THE PART OF RKI INSTRUMENTS, INC. INCLUDING BUT NOT LIMITED TO, THE WARRANTY OF MERCHANTABILITY OR FITNESS FOR A PARTICULAR PURPOSE. IN NO EVENT SHALL RKI INSTRUMENTS, INC. BE LIABLE FOR INDIRECT, INCIDENTAL, OR CONSEQUENTIAL LOSS OR DAMAGE OF ANY KIND CONNECTED WITH THE USE OF ITS PRODUCTS OR FAILURE OF ITS PRODUCTS TO FUNCTION OR OPERATE PROPERLY.

This warranty covers instruments and parts sold to users by authorized distributors, dealers, and representatives as appointed by RKI Instruments, Inc.

We do not assume indemnification for any accident or damage caused by the operation of this gas monitor, and our warranty is limited to the replacement of parts or our complete goods.

1.800.561.8187 www.itm.com information@itm.com

Table of Contents

Overview 1

Specifications 1

Description 2

External Components 3
Internal Components 5

Installation 6

Mounting the Combustible Gas Sample-Draw Detector 6
Connecting the Sample Lines to the Sample-Draw Detector 7
Wiring the Combustible Gas Sample-Draw Detector to a Controller 8

Start Up 10

Introducing Incoming Power 10
Setting the Zero Reading 10

Maintenance 11

Preventive Maintenance 11
Troubleshooting 12
Replacing Components of the Combustible Gas Sample-Draw Detector 13
Adjusting the Low Flow Setting 14
Removing the Particle Filter's Tubing Stub, if Necessary 15

Calibration Frequency 16

Calibration 16

Preparing for Calibration 16
Setting the Zero Reading 16
Setting the Response Reading 16
Returning to Normal Operation 17

Parts List 17

1.800.561.8187 www.itm.com information@itm.com

Overview

This operator's manual describes the 35-3001-01 combustible gas sample-draw detector. This manual also describes how to install, start up, maintain, and calibrate the sample-draw detector when using it with a gas monitoring controller. A parts list at the end of this manual lists replacement parts and accessories for the sample-draw detector.

Specifications

Table 1 lists specifications for the combustible gas sample-draw detector. See the controller Operator's Manual for information specific to the controller.

Table 1: Specifications

Target Gas and Detection Range	Combustible gas: 0 - 100% LEL	
Input Power	24 VDC Nominal (18.5 VDC - 30 VDC)	
Construction (housing)	Fiberglass/polyester (NEMA 4X)	
Dimensions	8.5 in. H x 6.5 in. W x 4.25 in. D	
Weight	4.5 lbs.	
Sampling Method	Sample-draw	
Sample Flow	3.0 SCFH typical, with no inlet or exhaust line	
Flow to Sensor	1.0 SCFH (nominal)	
Low Flow Setpoint	0.6 ± 0.1 SCFH	
Maximum Recommended Inlet/ Exhaust Line Length for 1/4" O.D. x 1/8" I.D. Tubing	Inlet	Exhaust
	100 feet	0 feet
	50 feet	50 feet
Maximum Recommended Inlet/ Exhaust Line Length for 1/4" O.D. x 0.170" I.D. Tubing	Inlet	Exhaust
	100 feet	100 feet
Response Time	90% in 30 seconds	
Accuracy	± 5% of reading or ± 2% LEL (whichever is greater)	

WARNING: ***When using the 35-3001-01, you must follow the instructions and warnings in this manual to assure proper and safe operation of the 35-3001-01 and to minimize the risk of personal injury. Be sure to maintain and periodically calibrate the 35-3001-01 as described in this manual.***

1.800.561.8187 www.itm.com information@itm.com

Description

This section describes the components of the combustible gas sample-draw detector.

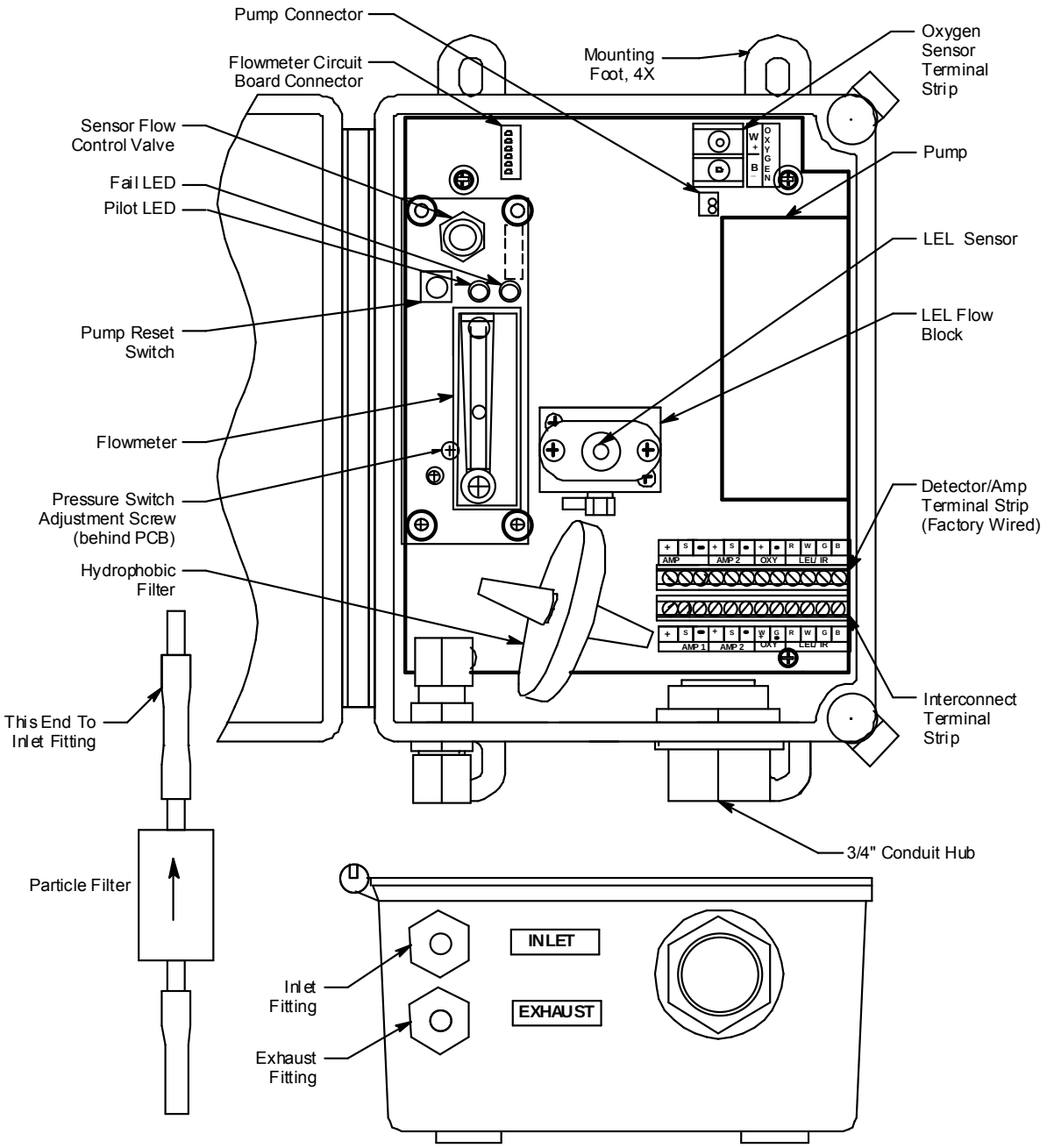

Figure 1: Combustible Gas Sample-Draw Detector Component Location

External Components

This section describes the sample-draw detector's external components.

Housing

The sample-draw detector's fiberglass housing is weather- and corrosion-resistant. It is suitable for installation where general purpose equipment is in use.

1.800.561.8187 www.itm.com information@itm.com

The housing door is hinged on the left side and is secured by two latches on the right side. The flowmeter and status LEDs are visible through a window in the housing door.

Four mounting feet are attached to the back of the housing (one at each corner). Use the mounting feet to install the housing to a vertical surface.

Sample Fittings

The sample fittings are located on the left side of the bottom of the housing. The inlet fitting is near the front of the housing and the exhaust fitting is near the back of the housing. The sample fittings accept 1/4 in. rigid tubing. See the Installation section on page 6 to connect tubing to the sample fittings.

Particle Filter

A particle filter with a tubing stub on one end is shipped with the instrument but it is not factory installed. If the particle filter is installed directly to the inlet fitting, the tubing stub must be used. If the particle filter is installed somewhere else, like at the end of the inlet line, the tubing stub can be used or removed.

Conduit Hub

One 3/4" conduit hub is located on the right side of the bottom of the housing. It is used for routing wiring into the housing by using conduit or an appropriate cable bushing.

Internal Components

This section describes the sample-draw detector's internal components (see Figure 1). Figure 2 illustrates how the gas sample moves through the flow system.

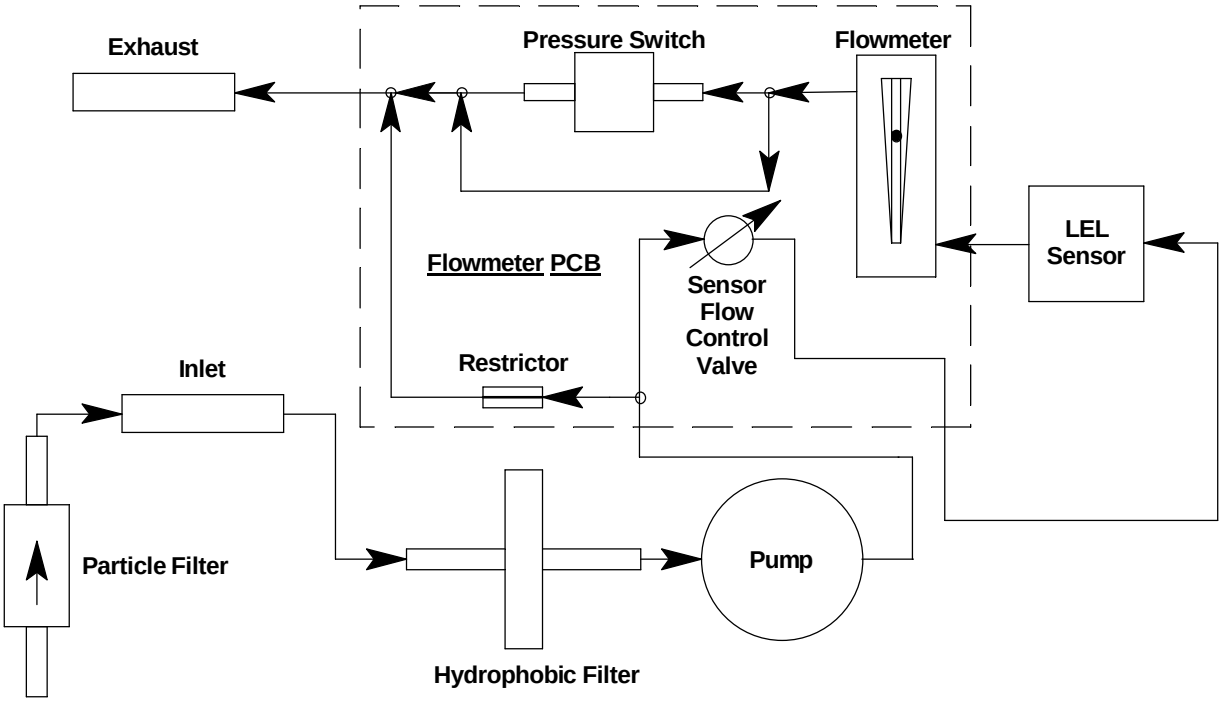

Figure 2: Combustible Gas Sample-Draw Detector Flow Diagram

Main Circuit Board

The main circuit board includes the detector/amp terminal strip, interconnect terminal strip, oxygen sensor terminal strip, pump connector, and flowmeter circuit board connector (see Figure 1).

1.800.561.8187 www.itm.com information@itm.com

Detector/Amp Terminal Strip

The detector/amp terminal strip is the upper twelve-point terminal strip in the bottom right corner of the main circuit board. Use the detector/amp terminal strip to connect the combustible gas sensor to the main circuit board.

NOTE: The combustible gas sensor is factory-wired to the main circuit board. See the "Installation" section on page 6 for all wiring procedures related to the sample-draw detector.

Interconnect Terminal Strip

The interconnect terminal strip is the lower twelve-point terminal strip in the bottom right corner of the main circuit board. Use the interconnect terminal strip to connect the sample-draw detector to a controller.

Oxygen Sensor Terminal Strip

The oxygen sensor terminal strip is a two-point terminal strip in the upper right corner of the main circuit board. This terminal strip is not used in this version of the sample-draw detector.

Pump Connector

The pump connector is the two-point connector below the oxygen terminal strip in the upper right corner of the main circuit board. Use the pump connector to connect the pump to the main circuit board.

NOTE: The pump is factory-wired to the main circuit board. See "Installation" on page 6 for all wiring procedures related to the sample-draw detector.

Flowmeter Circuit Board Connector

The flowmeter circuit board connector is a six-position connector in the upper left corner of the main circuit board. Use the flowmeter circuit board connector to connect the flowmeter circuit board to the main circuit board.

NOTE: The flowmeter circuit board is factory wired to the main circuit board. See "Installation" on page 6 for all wiring procedures related to the sample-draw detector.

Flowmeter Circuit Board

The flowmeter circuit board is mounted to the left side of the main circuit board using standoffs. It includes the flowmeter, sensor flow control valve, status LEDs, pressure switch, and pump reset switch.

Flowmeter

The flowmeter is mounted to the right side of the flowmeter circuit board. You can see it through the window in the door. A ball in the flowmeter column indicates the flow rate to the sensor. The flowmeter measures the flow in the range 0.2 to 2.0 SCFH (Standard Cubic Feet per Hour). The optimum flow rate is 1.0 SCFH.

Sensor Flow Control Valve

The sensor flow control valve is mounted to the flowmeter circuit board above the flowmeter. The sensor flow control valve adjusts the flow rate to the detector. Turn the valve's knob counterclockwise to increase the flow and clockwise to decrease the flow.

1.800.561.8187 www.itm.com information@itm.com

Status LEDs

Two status LEDs are above the flowmeter. They are also visible through the window in the housing door. The green Pilot LED is on when the sample-draw detector is receiving power from the controller. The red Fail LED is on when the sample flow rate is below the low flow level.

Pressure Switch

The pressure switch is mounted to the back of the flowmeter circuit board. The pressure switch monitors the flow rate of the incoming gas sample.

If the flow rate falls below the preset low flow level, the pressure switch causes the Fail LED to turn on and interrupts the signal from the detector. The interrupted detector signal causes a fail condition at the controller. The low flow level is factory-set at 0.6 SCFH (±0.1 SCFH). See "Adjusting the Low Flow Setting" on page 14 to adjust this setting.

Pump Reset Switch

The pump reset switch is located to the left of the status LEDs. When a low flow condition occurs, the pump will be shut off. To reset the low flow condition and start the pump again, press and hold the pump reset switch for about 2 seconds, then release.

Hydrophobic Filter

The hydrophobic filter is located toward the bottom left of the main circuit board. The filter prevents particulates and water in the incoming gas sample from damaging the flow and detection systems. Replace the filter when it appears dirty, discolored, or clogged.

Pump

The pump is mounted to the right side of the main circuit board. The pump pulls the gas sample into the sample-draw detector. The pump operates on 24 VAC, which is generated from the 24 VDC supplied by the controller.

Combustible Gas Sensor

The catalytic combustible gas sensor detects combustible gas in the %LEL range. It uses a catalytic element for detection. The reaction of gas with oxygen on the catalyst causes a change in the resistance of the element which changes the current flowing through it. The current is proportional to the detection range of the sample-draw detector.

The combustible gas sensor is installed in the flow block and the flow block is mounted to the middle of the main circuit board. The sensor housing includes a sintered metal flame arrestor on one end that allows gas to diffuse into the sensor. On the other end, five pins extend from the sensor and plug into the socket connector. The connector allows you to replace the sensor without disconnecting the wiring. Four leads extending from the connector allow you to connect the combustible gas sensor to the main circuit board.

1.800.561.8187 www.itm.com information@itm.com

Installation

This section describes procedures to mount the sample-draw detector in the monitoring environment and wire the sample-draw detector to a controller.

Mounting the Sample-Draw Combustible Gas Detector

1. Select the mounting site. Consider the following when you select the mounting site:
   - Is there enough room to open the housing door and make wiring and tubing connections at the bottom of the housing?
   - Make sure there is sufficient room to perform start-up, maintenance, and calibration procedures.
   - Are the flowmeter and status LEDs visible?

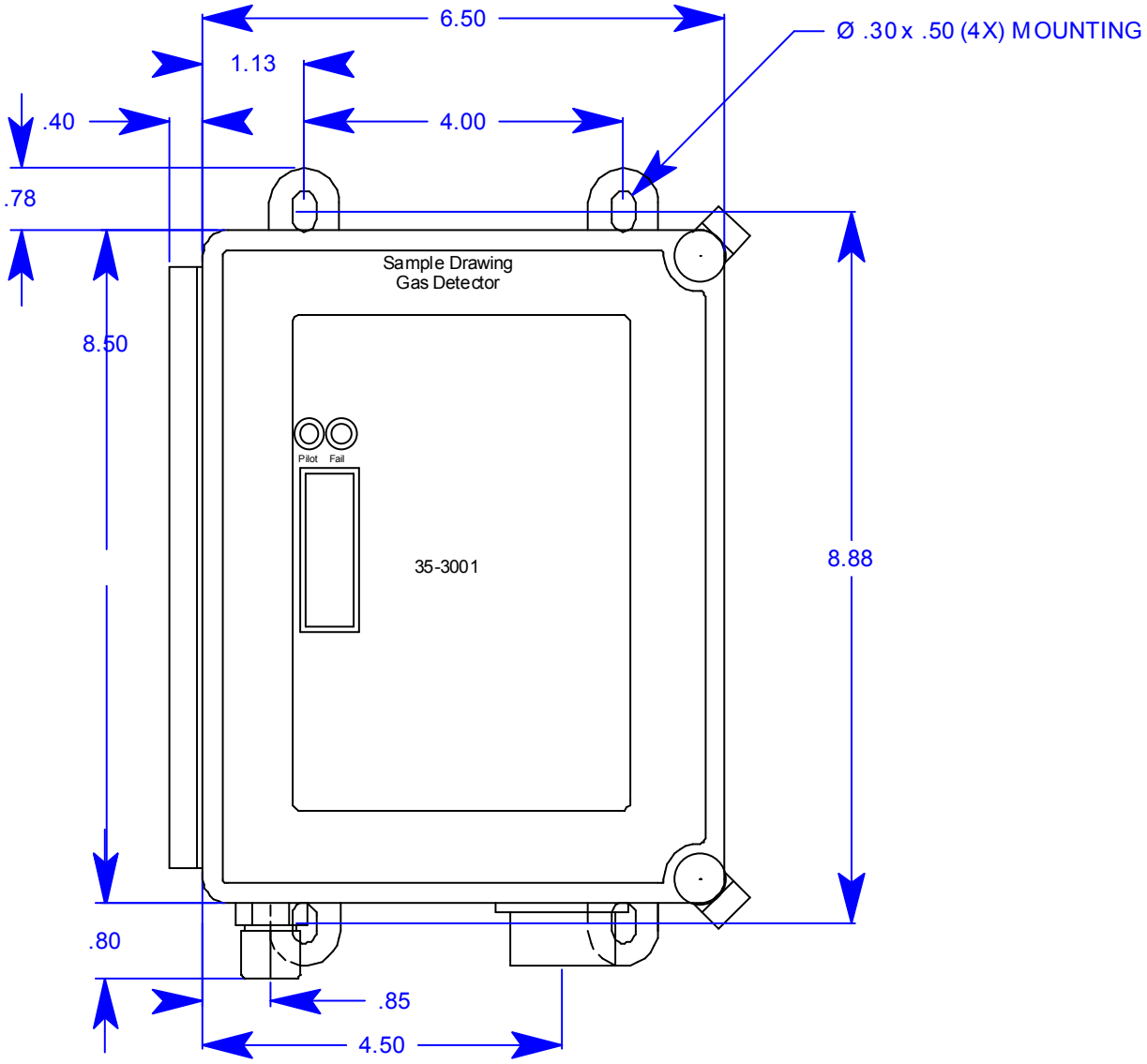

Figure 3: Outline and Mounting Dimensions

1.800.561.8187 www.itm.com information@itm.com

2. Close and latch the housing door.

NOTE: The sample-draw detector is shipped with the mounting feet "tucked under" the housing to protect the mounting feet during shipment.

3. Slightly loosen the screw that secures the mounting foot to the housing, then rotate the mounting foot 180 degrees (see Figure 3).
4. Tighten the screw that secures the mounting foot to the housing.
5. Repeat steps 3 and 4 for the remaining three mounting feet.
6. Position the sample-draw housing on a vertical surface at eye level (4 1/2 to 5 feet from the floor).
7. Insert 1/4 inch screws through the slots in the mounting feet to secure the housing to the mounting surface.

Connecting the Sample Lines to the Sample-Draw Detector

See Figure 5 for the fitting layout.

Installing the Inlet Line with Particle Filter Connected to the Inlet Fitting

1. Loosen the nut on the inlet fitting until 3 threads are visible.
2. Push the particle filter's tubing stub into the inlet fitting until it stops. Be sure the arrow on the particle filter is pointing toward the inlet fitting.
3. Hand tighten the nut on the inlet fitting so the ferrules clamp on the tubing. If the tube nut is removed, see Figure 5 for the arrangement of the fitting components.
4. Connect a length of sample tubing to the other side of the particle filter and route it to the sampling area. 1/4" O.D. rigid polypropylene, Teflon, or flexible polyurethane tubing may be used. RKI Instruments, Inc. recommends using either 1/4" O.D. x 1/8" I.D. or 1/4" O.D. x 0.170" I.D. tubing based on your length requirements. See "Specifications" on page 1 for maximum tubing lengths based on tubing size.

CAUTION: *If you use flexible sample tubing (polyurethane is acceptable), use an appropriate insert if necessary to provide support to the tubing and ensure a good seal when connecting to the flexible stub on the filter.*

CAUTION: *Avoid loops or slumps in the incoming sample line. To reduce response time, keep the incoming sample line as short as possible.*

Installing the Inlet Line without Particle Filter Connected to the Inlet Fitting

1. Loosen the nut on the inlet fitting until 3 threads are visible.
2. Push 1/4" O.D. rigid polypropylene or rigid Teflon sample tubing into the fitting until it stops. Flexible polyurethane tubing may be used with an appropriate insert. RKI Instruments, Inc. recommends using either 1/4" O.D. x 1/8" I.D. or 1/4" O.D. x 0.170" I.D. tubing based on your length requirements. See "Specifications" on page 1 for maximum tubing lengths based on tubing size.

CAUTION: *If you use **flexible** sample tubing (polyurethane is acceptable), use an appropriate insert to seal the connection between the tubing and the inlet fitting.*

1.800.561.8187 www.itm.com information@itm.com

3. Hand tighten the nut on the inlet fitting so the ferrules clamp on the tubing. If the tube nut is removed, see Figure 5 for the arrangement of the fitting components.
4. Route tubing from the inlet fitting to the sample area. See “Specifications” on page 1 for maximum tubing lengths based on tubing size.

CAUTION: *Avoid loops or slumps in the incoming sample line. To reduce response time, keep the incoming sample line as short as possible.*

---

5. If desired, install the particle filter onto the end of the inlet line. Be sure the arrow on the particle filter is pointed toward the inlet line.

Installing the Exhaust Line

1. Loosen the nut on the exhaust fitting until 3 threads are visible.
2. Push 1/4” O.D. rigid polypropylene or rigid Teflon sample tubing into the fitting until it stops. Flexible polyurethane tubing may be used with an appropriate insert. RKI Instruments, Inc. recommends using either 1/4” O.D. x 1/8” I.D. or 1/4” O.D. x 0.170” I.D. tubing based on your length requirements. See “Specifications” on page 1 for maximum tubing lengths based on tubing size.

CAUTION: *If you use **flexible** sample tubing (polyurethane is acceptable), use an appropriate insert to seal the connection between the tubing and the inlet fitting.*

---

3. Hand tighten the nut on the exhaust fitting so the ferrules clamp on the tubing. If the tube nut is removed, see Figure 5 for the arrangement of the fitting components.
4. Route the opposite end of the tubing to an open area where the sample can safely disperse or to an exhaust duct. See “Specifications” on page 1 for maximum tubing lengths based on tubing size.

Wiring the Sample-Draw Combustible Gas Detector to a Controller

---

WARNING: ***Always verify that the controller is off and that power to the controller is off before you make wiring connections.***

---

1. Turn off the controller.
2. Turn off power to the controller.
3. Unlatch and open the housing door of the sample-draw detector.
4. Guide a six-conductor, shielded cable or six wires in conduit through the conduit hub at the bottom of the sample-draw housing. A minimum of 18 AWG wire is recommended.
5. Connect the cable to the sample-draw detector’s interconnect terminal strip as shown in Figure 4.
6. Close and latch the housing door of the sample-draw detector.

CAUTION: *If using shielded cable, leave the cable shield’s drain wire insulated and disconnected at the sample-draw detector. You will connect the opposite end of the drain wire at the controller.*

---

7. Route the cable or wires in conduit leading from the sample-draw detector through one of the conduit hubs at the controller.

1.800.561.8187 www.itm.com information@itm.com

8. Connect the wires to the applicable detector/transmitter terminal strip at the controller as shown in Figure 4. Refer to the controller operator's manual and the controller detector head specification sheet for the 35-3001-01 for detector/terminal strip connections specific to the controller.

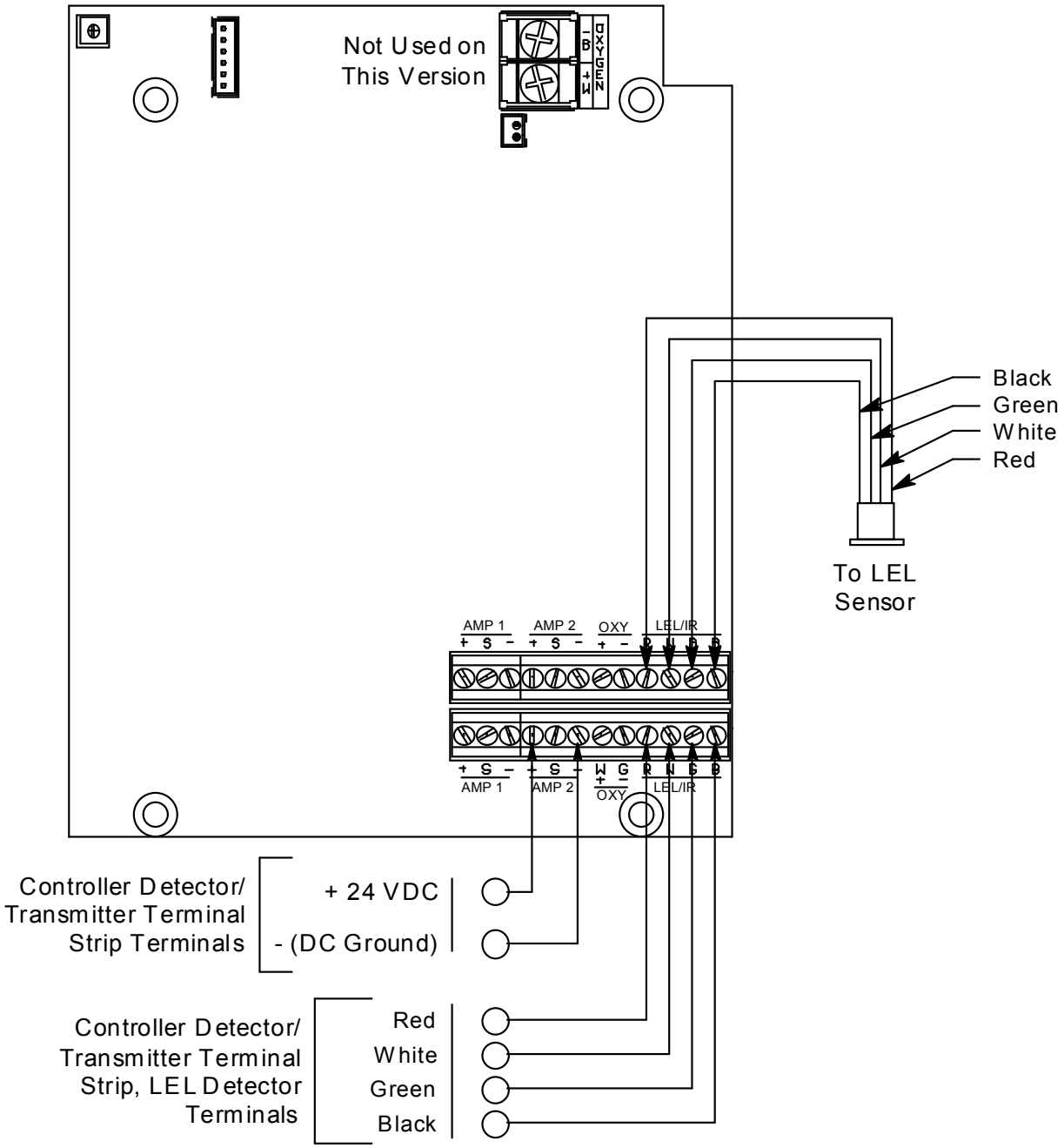

Figure 4: Wiring the Sample-Draw Detector to a Controller

9. If shielded cable is used, connect the cable's drain wire to an available chassis (earth) ground at the controller. RKI controllers typically have a ground stud that can be used to ground the cable's drain wire.

1.800.561.8187 www.itm.com information@itm.com

Start Up

This section describes procedures to start up the sample-draw detector and place the sample-draw detector into normal operation.

Introducing Incoming Power

1. Complete the installation procedures described earlier in this manual.
2. Verify that the wiring is correct and secure. Refer to the controller operator's manual for connections at the controller.
3. Turn on or plug in the power to the controller, then turn on the controller.
4. Verify that the sample-draw detector's Pilot LED is on.
5. Verify that the controller is on and operating properly. Refer to the controller operator's manual.
6. Verify that the flowmeter indicates a flow rate of approximately 1.0 SCFH. If necessary, use the sensor flow control valve to adjust the flow rate. Turn the valve's knob counterclockwise to increase the flow and clockwise to decrease the flow.

NOTE: The following step tests for leaks in the sample line. This test will cause a low flow condition at the sample-draw detector and a fail condition at the controller. Be sure to put the controller into its calibration program or disable external alarms before performing this test.

7. Verify that the incoming sample line is not leaking. To test the sample line, press and hold the reset switch and plug the open end of the sample line with your thumb. If the flowmeter ball drops to the bottom of the flowmeter, the incoming sample line is not leaking.
8. Remove your thumb from the sample line, release the reset switch, and verify the flowmeter returns to a normal flow rate.
9. Enable alarms or place the controller in normal operation.

CAUTION: *Allow the sample-draw detector to warm up for 5 minutes before you continue with the next section, "Setting the Zero Reading."*

Setting the Zero Reading

CAUTION: *If you suspect the presence of combustible gas in the monitoring environment, use the calibration kit and the zero air calibration cylinder to introduce "fresh air" to the sensor and verify an accurate zero setting. See "Calibration" on page 16 for instructions on using a zero air calibration cylinder for setting the zero reading.*

1. Verify that the sample-draw detector is sampling a fresh air environment (environment known to be free of combustible gas).
2. Verify a reading of 0 %LEL on the controller display screen for the applicable channel.

   If the display reading is 0 %LEL, start up is complete. The sample-draw detector is in normal operation. If the display reading is not 0 %LEL, continue with step 3.
3. Perform a zero operation at the controller. See "Setting the Zero Reading" on page 16 and the controller operator's manual for instructions to perform a zero operation.

1.800.561.8187 www.itm.com information@itm.com

Maintenance

This section describes maintenance procedures. It includes preventive maintenance procedures. This section also includes procedures to troubleshoot the sample-draw detector, replace components of the sample-draw detector, adjust the low flow setting, and remove the particle filter's tubing stub.

Preventive Maintenance

This section describes a preventive maintenance schedule to ensure the optimum performance of the sample-draw detector. It includes daily, monthly, and quarterly procedures.

Daily Visual Checks

1. Verify that the Pilot LED is on.
2. Verify that the flowmeter indicates a flow rate of approximately 1.0 SCFH. If necessary use the sensor flow control valve to adjust the flow rate to 1.0 SCFH. Turn the valve's knob counterclockwise to increase the flow and clockwise to decrease the flow.
3. Verify a display reading of 0 %LEL at the controller. Investigate significant changes in the display reading.

Monthly Response Test

This procedure describes a test to verify that the sample-draw detector responds properly to the target gas.

NOTE: To reduce the response time of this test, use a short incoming sample line. If the sample-draw detector's sample line is long, connect a shorter line for this test. Make sure you reconnect the sample line after you complete this procedure.

NOTE: Performing a response test on the sample-draw detector may cause alarms. Be sure to put the controller into its calibration program or disable external alarms before performing this test.

Preparing for the response test

NOTE: This procedure describes the RKI calibration kit that includes a demand flow regulator.

1. Verify that the display reading at the controller is 0 % LEL.

   If the display reading is not 0 % LEL, set the zero reading as described in "Calibration" on page 16, then continue this procedure.

Performing the response test

1. Screw the demand flow regulator into the calibration cylinder.
2. Connect the calibration tubing from the demand flow regulator to the inlet fitting. Gas will begin to flow.
3. After approximately one minute, verify that the reading at the controller stabilizes within ± 20% of the concentration of the test sample. If the reading is not within ± 20% of the test sample, calibrate the sample-draw detector as described in "Calibration" on page 16.
4. Remove the calibration tubing from the inlet fitting, then reconnect the sample tubing to the inlet fitting.

1.800.561.8187 www.itm.com information@itm.com

5. Store the calibration kit in a safe place.

Quarterly Calibration

Calibrate the sample-draw detector as described in “Calibration” on page 16.

Troubleshooting

The troubleshooting guide describes symptoms, probable causes, and recommended action for problems you may encounter with the sample-draw detector.

NOTE: This troubleshooting guide describes sample-draw detector problems only. See the controller Operator’s Manual if the controller exhibits any problems.

Fail Condition

Symptoms

- The sample-draw detector’s Fail LED is on.
- The monitoring device is operating properly but indicates a reading well below zero.

Probable causes

- The sample-draw detector’s flow rate is too low because of an obstructed sample line, failed pump, etc.
- The sample-draw detector is malfunctioning.
- The sensor wiring is disconnected or misconnected.

Recommended action

1. At the sample-draw detector, set the correct flow rate with the sensor flow control valve.
2. If you cannot set the correct flow rate, check the sample lines for obstructions or kinks.
3. Verify that the sensor wiring is correct and secure. “Wiring the Sample-Draw Combustible Gas Detector to a Controller” on page 8 describes sensor wiring connections.
4. Calibrate the sample-draw detector as described in “Calibration” on page 16.
5. If the fail condition continues, replace the sensor as described in “Replacing the Combustible Gas Sensor” on page 13.
6. If the fail condition continues, contact RKI Instruments, Inc. for further instruction.

Slow or No Response/Difficult or Unable to Calibrate

Symptoms

- The sensor responds slowly or does not respond during the monthly response test.
- Unable to accurately set the zero or response reading during the calibration procedure.
- The sensor requires frequent calibration.

Probable causes

- The calibration cylinder is low, out-dated, or defective.
- If a demand flow regulator calibration kit is used, the demand flow regulator is not functioning properly.
- The sample-draw detector’s flow rate is too low because of an obstructed sample line, failed pump, etc.
- The sample-draw detector is malfunctioning.

1.800.561.8187 www.itm.com information@itm.com

Recommended action

1. Verify that the calibration cylinder contains an adequate supply of a fresh test sample.
2. If a demand flow regulator calibration kit is used, use a different demand flow regulator to determine if the original one is functioning properly.
3. If necessary, set the correct flow rate with the sensor flow control valve.
4. If you cannot set the correct flow rate, check the sample line for obstructions or kinks.
5. If the calibration/response difficulties continue, replace the sensor as described later in this section.
6. If the calibration/response difficulties continue, contact RKI Instruments, Inc. for further instruction.

Replacing Components of the Combustible Gas Sample-Draw Detector

This section includes procedures to replace the sensor, hydrophobic filter, and particle filter.

Replacing the Combustible Gas Sensor

1. Turn off the controller.
2. Turn off power to the controller.
3. Open the housing door of the sample-draw detector.
4. Unscrew and remove the two screws that secure the sensor retaining plate, then lift the plate, connector, and sensor out of the housing.
5. Unplug the connector from the sensor.
6. Verify that you are using the correct replacement sensor (NC-6245 is printed on the sensor), then plug the sensor into the connector.
7. Place the sensor in the combustible gas sensor cavity, then position the retaining plate on the two standoffs.
8. Secure the retaining plate to the standoffs with the two screws you removed in step 4.
9. Close and latch the housing door.
10. Turn on power to the controller.
11. Turn on the controller.

CAUTION: *Allow the replacement sensor to warm up for 5 minutes before you continue.*

---

12. Calibrate the replacement sensor as described in “Calibration” on page 16.

Replacing the Hydrophobic Filter

1. Turn off the controller.
2. Turn off power to the controller.
3. Open the housing door of the sample-draw detector.
4. Disconnect the filter from the rubber elbows on each end of the filter, then remove the filter from the sample-draw detector.
5. Install the new filter. Be sure the side of the filter marked “INLET” is connected to the elbow that is connected to the inlet fitting.
6. Turn on power to the controller.
7. Turn on the controller.

1.800.561.8187 www.itm.com information@itm.com

8. Verify that the flow rate is approximately 1.0 SCFH, then close the housing door.

Replacing the Particle Filter

1. Turn off the controller.
2. Turn off power to the controller.
3. If the particle filter is installed at the inlet fitting:
    1. Disconnect the tubing routed to the sampling area, if installed, from the particle filter.
    2. Disconnect the particle filter from the tubing stub.
    3. Install the new particle filter onto the tubing stub. Be sure the arrow on the particle filter is pointing toward the inlet fitting.
    4. Reinstall the tubing routed to the sampling area.
4. If the particle filter is installed at the end of the inlet line:
    1. Remove the particle filter from the tubing stub.
    2. Install the new particle filter onto the tubing stub. Be sure the arrow on the particle filter is pointing toward the inlet line.
5. Turn on power to the controller.
6. Turn on the controller.

Adjusting the Low Flow Setting

NOTE: Adjusting the low flow setting will cause a low flow alarm at the sample-draw detector and a fail alarm at the controller. Be sure to put the controller into its calibration program or disable external alarms before performing this test.

The factory-set low flow setting is 0.6 SCFH (±0.1). To adjust the low flow setting:

1. Use the sensor flow control valve to set the flow to 0.6 SCFH. Turn the valve's knob counterclockwise to increase the flow and clockwise to decrease the flow.

    If the sample-draw detector goes into low flow alarm before you can adjust the flow down to 0.6 SCFH, adjust the pressure switch adjustment screw 1/4 turn clockwise, then attempt to set the flow again. Repeat this step until you are able to adjust the flow to 0.6 SCFH.

NOTE: The pressure switch adjustment screw is accessible through a circular cutout in the flowmeter circuit board.

2. Slowly turn the pressure switch adjustment screw counterclockwise just until the sample-draw detector goes into low flow alarm.
3. Turn the sensor flow control valve's knob counterclockwise to increase the flow until the unit is out of low flow alarm when the reset switch is pressed and released.
4. Decrease the flow very slowly by turning the sensor flow control valve's knob clockwise and verify that the low flow alarm is 0.6 SCFH (±0.1).

    If the low flow alarm is set too high, turn the pressure switch adjustment screw slightly clockwise. Repeat steps 3 and 4 if necessary.
5. Use the sensor flow control valve to set the flow to 1.0 SCFH.
6. Make sure the sample-draw detector's Fail LED is off.

1.800.561.8187 www.itm.com information@itm.com

Removing the Particle Filter's Tubing Stub, if Necessary

A short tubing stub comes factory installed in the particle filter. It is used for connecting the particle filter to the inlet fitting. If you have installed the particle filter and no longer want it installed, you will need to remove the particle filter's tubing stub from the inlet fitting and replace it with tubing.

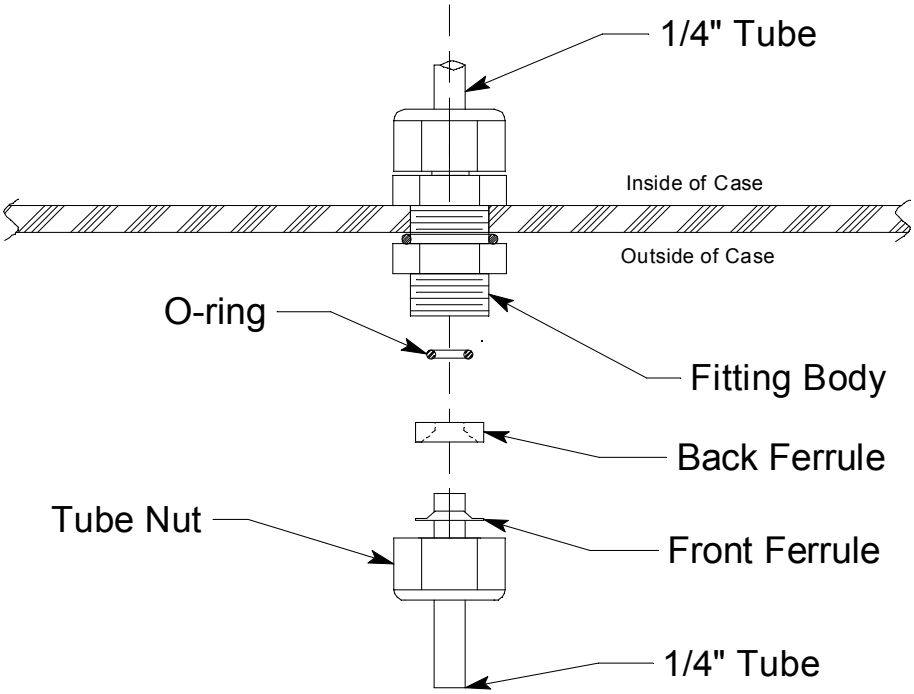

Figure 5: Inlet Fitting with Tubing Stub

CAUTION: *Do not pull the tubing stub downward to remove it.*

---

1. Remove the particle filter from its tubing stub.
2. Unscrew the outside inlet fitting tube nut from the fitting body. The tubing stub should come out with the tube nut. Be careful not to lose the O-ring that may come out with the tubing stub. If you do lose the O-ring or if it is damaged, see "Parts List" on page 17 for the spare part number.
3. Push the tubing stub up and out of the front ferrule being careful not to lose the ferrule set. If you do lose the ferrule set or if it is damaged, see "Parts List" on page 17 for the spare part numbers.
4. Push the new tubing up through the inlet fitting tube nut and replace the ferrule set and the O-ring, if it came out, in the orientation shown in Figure 5.
5. Screw the inlet fitting tube nut back onto the fitting body. See "Connecting the Sample Lines to the Sample-Draw Detector" on page 7 for instructions to install a new piece of tubing into the fitting.

1.800.561.8187 www.itm.com information@itm.com

Calibration Frequency

Although there is no particular calibration frequency that is correct for all sample draw detector applications, a calibration frequency of every 3 to 6 months is adequate for most applications. Unless experience in a particular application dictates otherwise, RKI Instruments, Inc. recommends a calibration frequency of every 3 months.

If an application is not very demanding, for example detection in a clean, temperature controlled environment where combustible gases are not normally present and calibration adjustments are minimal at calibration, then a calibration frequency of every 6 months is adequate.

If an application is very demanding, for example if combustible gases are present often and in significant concentrations or the environment is not well controlled, then more frequent calibration than every 3 months may be necessary.

Calibration

This section describes how to calibrate the combustible gas sample-draw detector. It includes procedures to prepare for calibration, set the zero reading, set the response reading, and return to normal operation.

The standard calibration gas for the sample-draw detector is methane. The sample-draw detector may be calibrated to other combustible gases such as hexane or hydrogen. Use the correct calibration gas for your installation.

NOTE: This procedure describes calibration using a demand flow regulator.

Preparing for Calibration

1. Follow the instructions in the controller's operator's manual for entering calibration mode.

NOTE: If you can verify a fresh air environment, it is not necessary to use the zero air calibration cylinder to set the zero reading.

2. Screw the regulator into a zero air calibration cylinder.

Setting the Zero Reading

1. Connect the sample tubing from the demand flow regulator to the sample-draw detector's inlet line. **This step is not necessary if you verified a fresh air environment earlier in this procedure.**
2. Allow the sample-draw detector to draw sample for one minute.
3. Follow the directions in the controller's operator's manual for setting the zero reading. If you used a zero air calibration cylinder to set the zero reading, proceed to step 4. If you verified a fresh air environment, proceed to the next section, Setting the Response Reading.
4. Disconnect the sample tubing from the inlet line.
5. Unscrew the regulator from the zero air calibration cylinder.

Setting the Response Reading

1. Screw the regulator into the combustible gas calibration cylinder.
2. Connect the sample tubing from the demand flow regulator to the sample-draw detector's inlet line.

1.800.561.8187 www.itm.com information@itm.com

3. Allow the sample-draw detector to draw sample for one minute.
4. Follow the directions in the controller's operator's manual for setting the span.
5. Disconnect the sample tubing from the inlet line.
6. Unscrew the regulator from the combustible gas calibration cylinder.

Returning to Normal Operation

1. Wait approximately one minute to allow the combustible gas reading to stabilize.
2. Follow the instructions in the controller's operator's manual to exit the calibration mode.
3. Store the components of the calibration kit in a safe and convenient place.

Parts List

Table 2 lists replacement parts and accessories for the sample-draw combustible gas detector.

Table 2: Parts List

Part Number	Description
06-1248RK	Sample tubing, 3/16" ID x 5/16" OD, specify length
06-1248RK-03	Sample tubing, 3/16" ID x 5/16" OD, 3 feet (for calibration kit)
17-2670	Inlet fitting O-ring
17-2671	Inlet fitting front ferrule
17-2672	Inlet fitting back ferrule and tube nut
30-1016RK	Pump
33-0165RK	Hydrophobic filter
33-0167RK	Particle filter
71-0282RK	Operator's Manual, 35-3001-01 Sample-Draw Detector
81-0002RK-01	Calibration cylinder, 50% LEL hydrogen in air, 34 liter steel
81-0002RK-03	Calibration cylinder, 50% LEL hydrogen in air, 103 liter
81-0007RK-01	Calibration cylinder, 50% LEL hexane in air, 34 liter steel
81-0012RK-01	Calibration cylinder, 50% LEL methane in air, 34 liter steel
81-0012RK-03	Calibration cylinder, 50% LEL methane in air, 103 liter
81-0076RK-01	Zero air calibration cylinder, 34 liter steel
81-0076RK-03	Zero air calibration cylinder, 103 liter
81-1054RK	Regulator, demand flow, for 34 liter aluminum, 58 liter, and 103 liter calibration cylinders (cylinders with internal threads)
81-1055RK	Regulator, demand flow, for 17 liter and 34 liter steel calibration cylinders (cylinders with external threads)
NC-6245	Combustible gas sensor, plug-in type, **LEL** range

1.800.561.8187 www.itm.com information@itm.com