# Inside Micrometers

## SERIES 141 — Interchangeable Rod Type

### Technical Data

Metric Model
Accuracy: ±(6+L/50)µm
L=Maximum measuring length (mm)
Fraction rounded up

Inch Model
Accuracy: ±{.00024+ (.00004xR/2)}"
R=Maximum measuring length (inch)
Fraction rounded up

Graduation: 0.01mm or .001"

### Optional Accessories

– – – – : Setting ring (See page C-29.)

141-233

### FEATURES

- Wide range of ID measurements with interchangeable rods.
- Each interchangeable rod is marked with its measuring range.
- The sizes of interchangeable rods can be adjusted with spacing collars.
- Both micrometer head and furnished rods are satin-chrome finished throughout.
- Supplied in fitted plastic case. Over 1000mm / 40" supplied in wooden case.

141-101

When using the extension rod

### DIMENSIONS

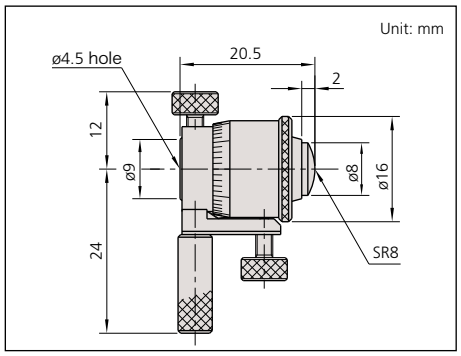


### SPECIFICATIONS

**Metric**

| Range | Order No. | Travel of micrometer head | Remarks |
|---|---|---|---|
| 25 - 32mm | **141-001 / 141-003*** | 7mm | Micrometer Head only |
| 25 - 50mm | **141-101 / 141-103*** | 7mm | with 2 rods |
| 50 - 63mm | **141-025 / 141-027*** | 13mm | Micrometer Head only |
| 50 - 200mm | **141-205 / 141-211*** | 13mm | with 3 rods |
| 50 - 300mm | **141-206 / 141-212*** | 13mm | with 5 rods |
| 200 - 225mm | **141-009 / 141-011*** | 25mm | Micrometer Head only |
| 200 - 500mm | **141-117** | 25mm | with 3 rods |
| 200 - 1000mm | **141-118** | 25mm | with 8 rods |

*with carbide tipped face

**Inch**

| Range | Order No. | Travel of micrometer head | Remarks |
|---|---|---|---|
| 1" - 1.25" | **141-002 / 141-004*** | .25" | Micrometer Head only |
| 1" - 2" | **141-102 / 141-104*** | .25" | with 2 rods |
| 2" - 2.5" | **141-026 / 141-028*** | .5" | Micrometer Head only |
| 2" - 8" | **141-208 / 141-214*** | .5" | with 3 rods |
| 2" - 12" | **141-233 / 141-215*** | .5" | with 5 rods |
| 8" - 9" | **141-010 / 141-012*** | 1" | Micrometer Head only |
| 8" - 20" | **141-121** | 1" | with 3 rods |
| 8" - 40" | **141-122** | 1" | with 8 rods |

*with carbide tipped face

Mitutoyo
1.800.561.8187 www.itm.com information@itm.com