testo

CE

Operating instructions
testo compressed air meter

0555 6451
0555 6452
0555 6453
0555 6454

UK

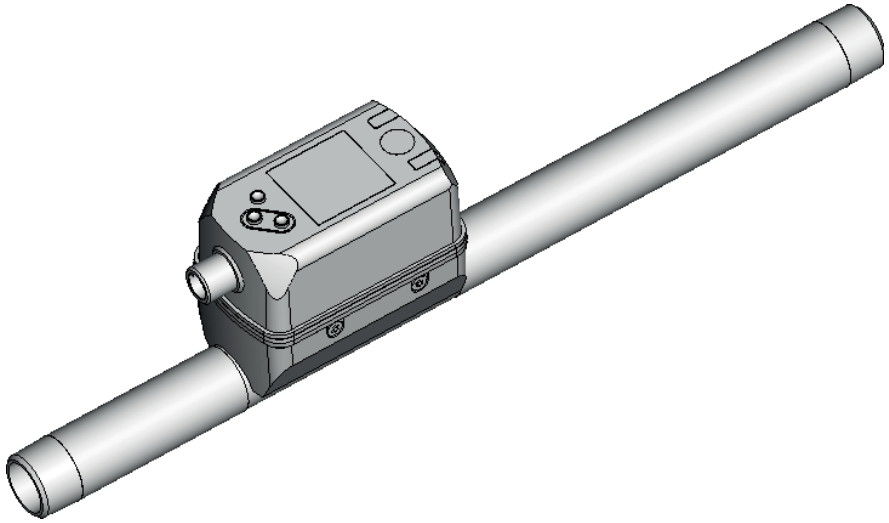

80290112 / 00 12 / 2019

1.800.561.8187 www.itm.com information@itm.com

Contents

1 Preliminary note 5
1.1 Symbols used 5
1.2 Warnings used 5
1.3 Safety instructions 5

2 Functions and features 7
2.1 Pressure Equipment Directive (PED) 7

3 Function 8
3.1 Processing of the measured signals 8
3.2 Analogue output 9
3.3 Consumed quantity monitoring 11
3.3.1 Meter reading 11
3.3.2 Counter reset 11
3.4 Measured value damping 12
3.5 Low flow cut-off 12
3.6 Simulation 12
3.7 Colour of the characters in the display 13

4 Installation 14
4.1 Installation location 14
4.2 Installation position 14
4.2.1 Inlet and outlet pipe lengths 14
4.2.2 Orientation 15
4.3 Installation in pipes 16

5 Electrical connection 16

6 Operating and display elements 18

7 Menu 19
7.1 Process value display (RUN) 19
7.2 Main menu and Extended functions (EF) 20
7.3 Submenu OUT1, OUT2, CFG 21
7.4 Submenu MEM, DIS 22
7.5 Submenu COLR, SIM 23
7.6 Explanation of the menu 24
7.6.1 Submenu OUT1 and OUT2 24
7.6.2 Submenu CFG 24

1.800.561.8187 www.itm.com information@itm.com

7.6.3 Submenu MEM 24
7.6.4 Submenu DIS 25
7.6.5 Submenu COLR 25
7.6.6 Submenu SIM 26

8 Set-up 26

9 Parameter setting 27
9.1 Parameter setting in general 27
9.1.1 Select submenu 27
9.1.2 Change to the process value display (RUN mode) 28
9.1.3 Lock / unlock 28
9.1.4 Timeout 28
9.2 Settings for volumetric flow monitoring 28
9.2.1 Analogue signal volumetric flow OUT1 or OUT2 28
9.3 Settings for consumed quantity monitoring 28
9.3.1 Manual counter reset 28
9.3.2 Time-controlled counter reset 29
9.3.3 Deactivation of the counter reset 29
9.4 Settings for temperature monitoring 29
9.4.1 Analogue signal temperature OUT1 or OUT2 29
9.5 Settings for pressure monitoring 29
9.5.1 Analogue signal pressure OUT1 or OUT2 29
9.6 User settings (optional) 30
9.6.1 Standard display 30
9.6.2 Standard unit of measurement for volumetric flow 30
9.6.3 Standard unit of measurement for temperature 30
9.6.4 Standard unit of measurement for pressure 30
9.6.5 Measured value damping 31
9.6.6 Low flow cut-off 31
9.6.7 Standard conditions 31
9.6.8 Zero-point calibration pressure 31
9.6.9 Colour of the characters in the display 32
9.6.10 Error behaviour of the outputs OUT1 or OUT2 32
9.6.11 Restore factory setting 33
9.7 Diagnostic functions 33
9.7.1 Read min/max values 33
9.7.2 Simulation 34

10 Operation 34
11 Error correction 34
12 Maintenance, repair and disposal 36
13 Factory setting 36

1 Preliminary note

1.1 Symbols used

▶ Instructions

> Reaction, result

[…] Designation of keys, buttons or indications

→ Cross-reference

Important note
Non-compliance may result in malfunction or interference.

Information
Supplementary note.

UK

1.2 Warnings used

CAUTION

Warning of personal injury.
Slight reversible injuries may result.

1.3 Safety instructions

- The device described is a subcomponent for integration into a system.
  - The manufacturer is responsible for the safety of the system.
  - The system manufacturer undertakes to perform a risk assessment and to create a documentation in accordance with legal and normative requirements to be provided to the operator and user of the system. This documentation must contain all necessary information and safety instructions for the operator, the user and, if applicable, for any service personnel authorised by the manufacturer of the system.
- Read this document before setting up the product and keep it during the entire service life.
- The product must be suitable for the corresponding applications and environmental conditions without any restrictions.
- Only use the product for its intended purpose (→ Functions and features).
- Only use the product for permissible media (→ Technical data).

- If the operating instructions or the technical data are not adhered to, personal injury and/or damage to property may occur.
- The manufacturer assumes no liability or warranty for any consequences caused by tampering with the product or incorrect use by the operator.
- Installation, electrical connection, set-up, operation and maintenance of the unit must be carried out by qualified personnel authorised by the machine operator.
- Protect units and cables against damage.

2 Functions and features

The unit monitors the standard volume flow of compressed air in industrial use.

It detects the 5 process variables flow velocity, volumetric flow quantity, consumed quantity, medium temperature and pressure.

All indications apply to standard volume flow to DIN ISO 2533, i.e. volume flow at 1013 mbar, 15 °C and 0 % relative air humidity. The unit can be set to different standard conditions (→ 9.6.7).

This is a class A product. This product may cause radio interference in domestic areas.

UK

▶ If required, take appropriate EMC screening measures.

2.1 Pressure Equipment Directive (PED)

The units comply with the Pressure Equipment Directive. They are designed for stable gases of group 2 fluids and manufactured in accordance with sound engineering practice.

3 Function

- The volumetric flow is monitored by a calorimetric measuring system, the measured signals are evaluated by the electronics.
- The unit detects the pressure and the media temperature of the volumetric flow as additional process values.
- The unit displays the current process values.
- The unit has many self-diagnostic options.
- A simulation mode allows simplified set-up of the sensor.

3.1 Processing of the measured signals

The unit generates 2 output signals according to the parameter setting:

OUT1: 5 selection options

- analogue signal for volumetric flow quantity
- analogue signal for temperature
- analogue signal for pressure
- OFF (output switched to high impedance)

OUT2: 4 selection options

- analogue signal for volumetric flow quantity
- analogue signal for temperature
- analogue signal for pressure
- OFF (output switched to high impedance)

3.2 Analogue output

The unit provides an analogue signal that is proportional to the volumetric flow quantity, the medium temperature or the pressure.

Within the measuring range the analogue signal is 4...20 mA.

The measuring range is scalable:

- [ASPx] determines at which measured value the output signal is 4 mA.
- [AEPx] determines at which measured value the output signal is 20 mA.

Minimum distance between [ASPx] and [AEPx] = 20 % of the final value of the measuring range.

UK

If the measured value is outside the measuring range or in the event of an internal error, the current signal indicated in Fig. 1 is provided.

For measured values outside the display range or in case of a fault, messages are displayed (cr.UL, UL, OL, cr.OL, Err; → 11).

The analogue signal in case of a fault is adjustable (→ 9.6.10):

- [FOU] = On determines that the analogue signal goes to the upper final value (21.5 mA) in case of an error.
- [FOU] = OFF determines that the analogue signal goes to the lower final value (3.5 mA) in case of an error.
- [FOU] = OU defines that the analogue signal goes to the upper final value (21.5 mA) in case of a pressure measurement error and to the lower final value (3.5 mA) in case of a flow / temperature measurement error.

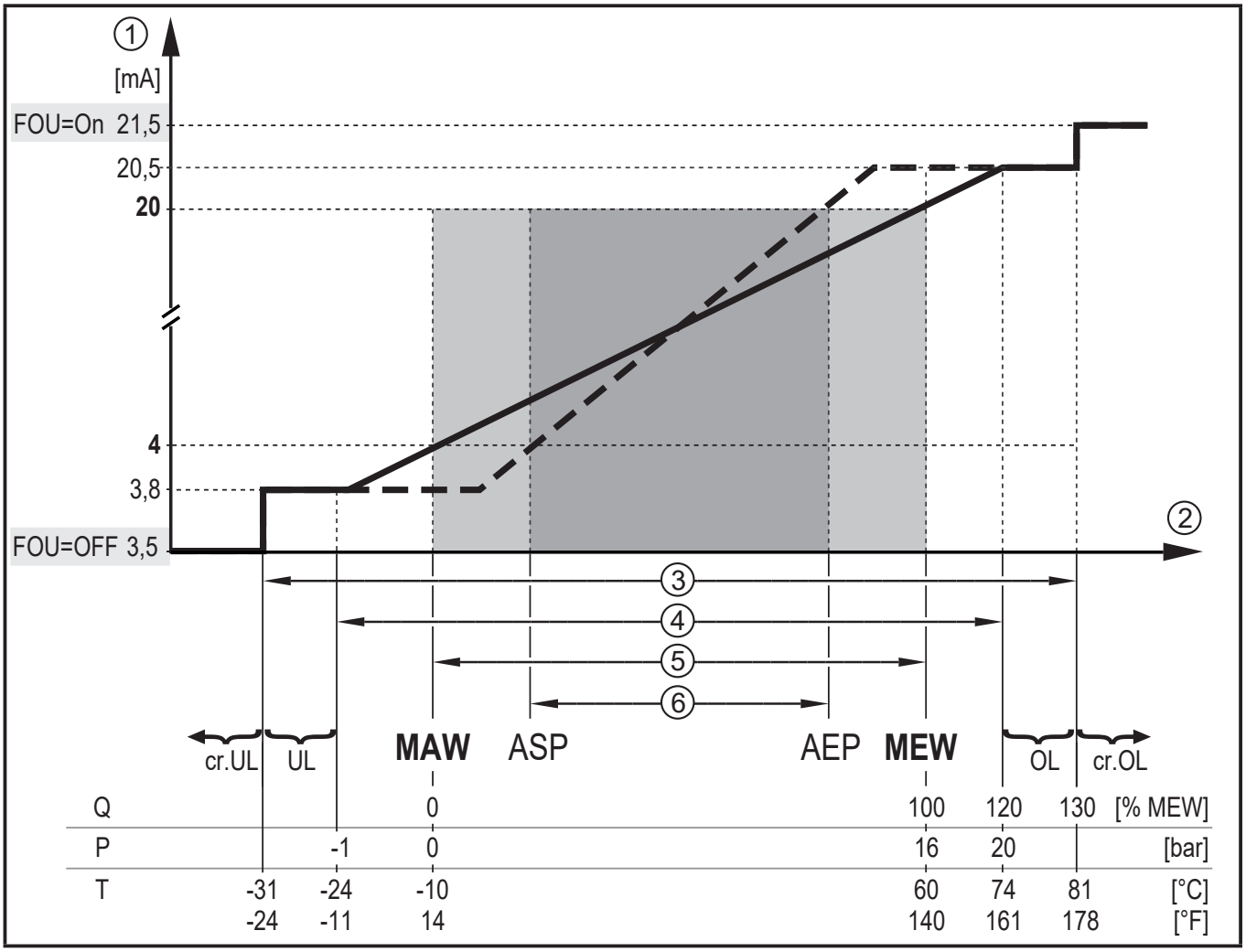

Fig. 1: Characteristics of the analogue output according to the standard IEC 60947-5-7.

① analogue signal
② measured value (volumetric flow, temperature or pressure)
③ detection zone
④ display range
⑤ measuring range
⑥ scaled measuring range

Q: flow
P: pressure
T: temperature
MAW: initial value of the measuring range for non-scaled measuring range (With setting of a low-flow cut for Q: signal output starting at MAW + LFC → 3.5.)
MEW: final value of the measuring range for non-scaled measuring range
ASP: analogue start point with scaled measuring range
AEP: analogue end point with scaled measuring range
UL: below the display range
OL: above the display range
cr.UL: below the detection zone (error)
cr.OL: above the detection zone (error)

3.3 Consumed quantity monitoring

The unit has an internal quantity meter (totaliser). It continuously sums up the consumed quantity and provides this process value on the display.

3.3.1 Meter reading

The current quantity meter count can be indicated (→ 7.1).

In addition, the value before the last reset is saved. This value and the time since the last reset can also be displayed (→ 7.1).

The meter saves the totalled volumetric flow quantity every 10 minutes. After a power failure this value is available as the current meter reading. If a time-controlled reset is set, the elapsed time of the set reset interval is also saved. So the possible data loss can be at most 10 minutes.

UK

3.3.2 Counter reset

The setting of the parameter [rTo] defines by which method the quantity meter is reset:

[rTo]	Counter reset
OFF (→ 9.3.3)	The preset counter is only reset - when a manual reset is made (→ 10.3.1) or - when the maximum display range has been exceeded (99.999.999).
1, 2,... h 1, 2,... d 1, 2,... w (→ 9.3.2)	The preset counter is automatically reset when the time has elapsed and the count starts again (→ 9.3.2 Time-controlled counter reset).

The accuracy of the consumed quantity measurement depends on the accuracy of the flow measurement.

3.4 Measured value damping

The damping time [dAP.F] und [dAP.P] allows to set after how many seconds the output signal has reached 63 % of the final value if the flow value / the pressure value changes suddenly. The set damping time stabilises the analogue outputs and the display.

The damping time is added to the response time of the sensor (→ Technical data).

The signals UL, crUL, OL and crOL (→ 11) are defined under consideration of the damping time.

3.5 Low flow cut-off

With the function low flow cut-off [LFC] it is possible to suppress small volumetric flow quantities. Flows below the LFC value are evaluated by the sensor as standstill (Q = 0).

3.6 Simulation

With this function, the process values flow, temperature, pressure and meter reading of the totaliser are simulated and their signal chain is reviewed.

When the parameters cr.UL, UL, OL und cr.OL are set, the process values that lead to an error message or warning can be simulated (→ 11).

When the simulation is started, the values of the totaliser are frozen and the simulated totaliser is set to 0. The simulated flow value then has an effect on the simulated totaliser. When the simulation is ended, the initial totaliser values are restored.

The simulation does not have any effect on the currently existing process values. The outputs operate as previously set.

During the simulation the original totaliser value remains saved without any changes even if there is a real flow.

During the simulation operation, no error message of the currently real application is available. They are suppressed by the simulation.

3.7 Colour of the characters in the display

The colour of the characters in the display can be set via the parameter [coL.x]:

- Permanent definition of the display colour:
  - bk/wh (black/white)
  - yellow
  - green
  - red
- Colour change from red to green or vice versa (Fig. 2):
  - r-cF (red display colour between the limits cFL...cFH)
  - G-cF (green display colour between the limits cFL...cFH)

UK

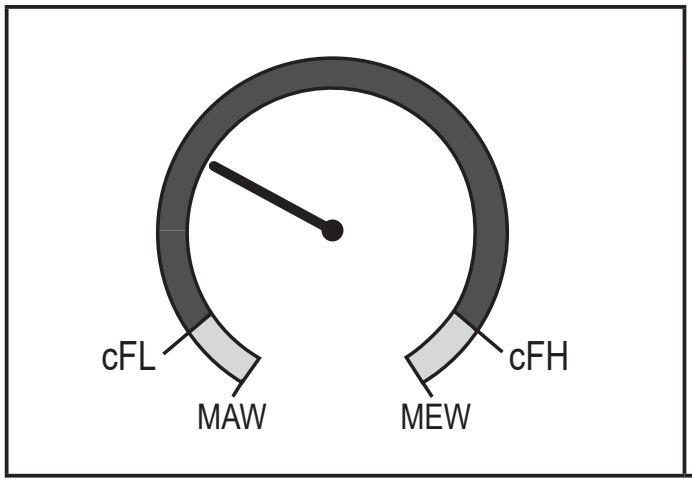

cFL = lower limit
cFH = upper limit

MAW = initial value of the measuring range
MEW = final value of the measuring range

Fig. 2: Colour setting window function

The limits can be freely selected within the measuring range and are independent of the output function set for OUT1 and OUT2.

4 Installation

CAUTION

If the medium temperature is above 50 °C (122 °F), parts of the housing can increase in temperature to over 65 °C (149 °F).

> Risk of burns.

▶ Protect the housing against contact with flammable substances and unintentional contact.

▶ Apply the supplied warning label to the sensor cable.

▶ Ensure that the system is free of pressure during installation.

▶ The rules and regulations for the installation and operation of compressed air equipment must be observed.

4.1 Installation location

▶ Install the unit downstream of the cold dryer.

▶ Install the unit near the load.

▶ The unit can be installed downstream of a maintenance unit.

▶ If oil is used for the loads: install the unit upstream of the oiler.

4.2 Installation position

4.2.1 Inlet and outlet pipe lengths

Structures in the pipe, bends, valves, reducing pieces and the like affect the function of the unit.

▶ Adhere to the distances between sensor and interference:

Interference		Distance to the sensor
	changes to the pipe diameter	10 x pipe diameter
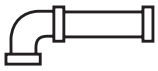	90° elbow	10 x pipe diameter
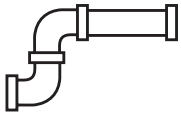	two 90° elbows, one plane	15 x pipe diameter

Interference		Distance to the sensor
	two 90° elbows, two planes	25 x pipe diameter
	valve, slide	40 x pipe diameter

Shut-off valves and control devices are not allowed directly in front of the unit.

UK

4.2.2 Orientation

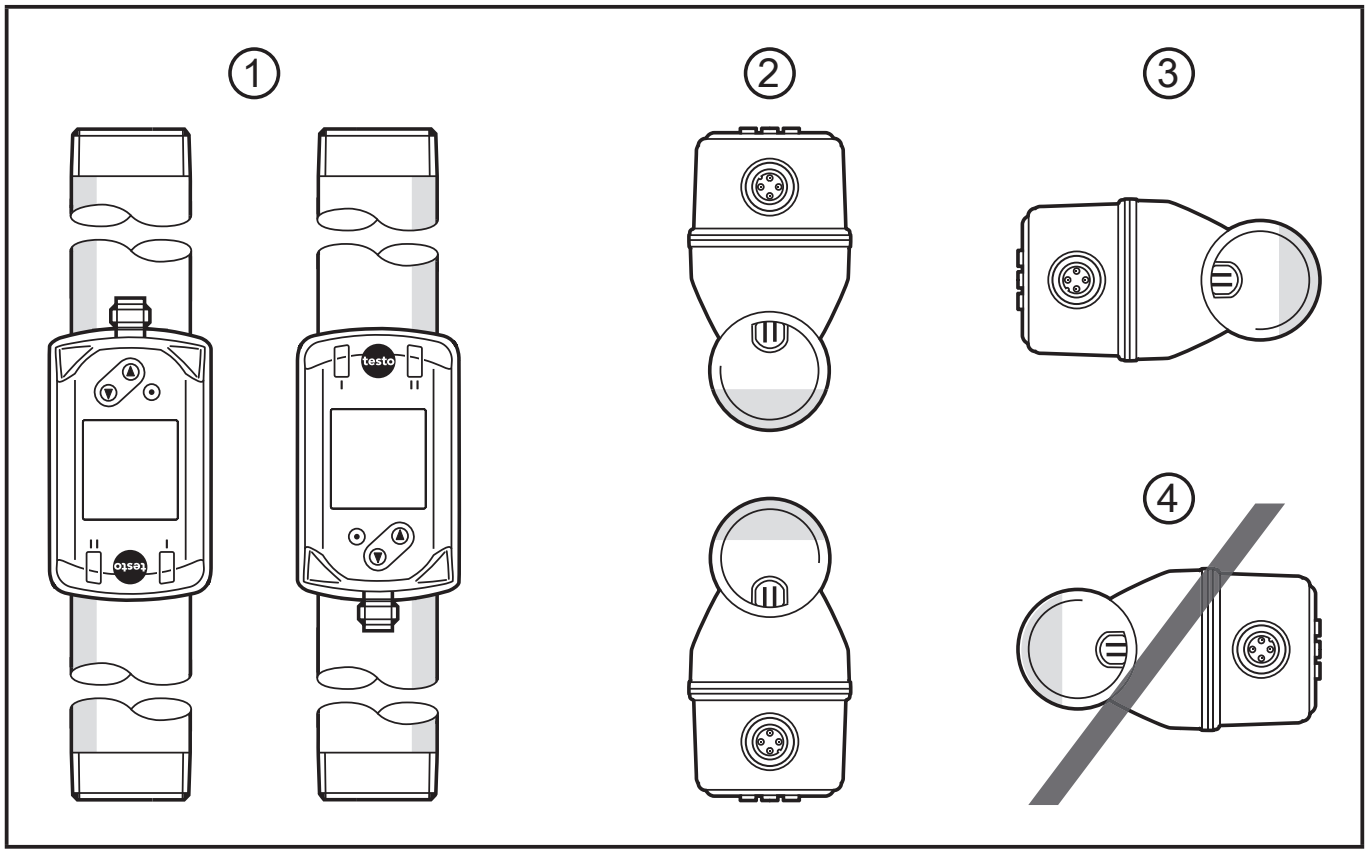

Fig. 1: Orientation of the pipe length and the unit

1: pipe length vertical, unit any
2: pipe length horizontal, unit vertical
3: pipe length right, unit on side
4: avoid: pipe length left, unit on side

4.3 Installation in pipes

▶ Fit the unit in the pipe in accordance with the flow direction (arrow on the unit):

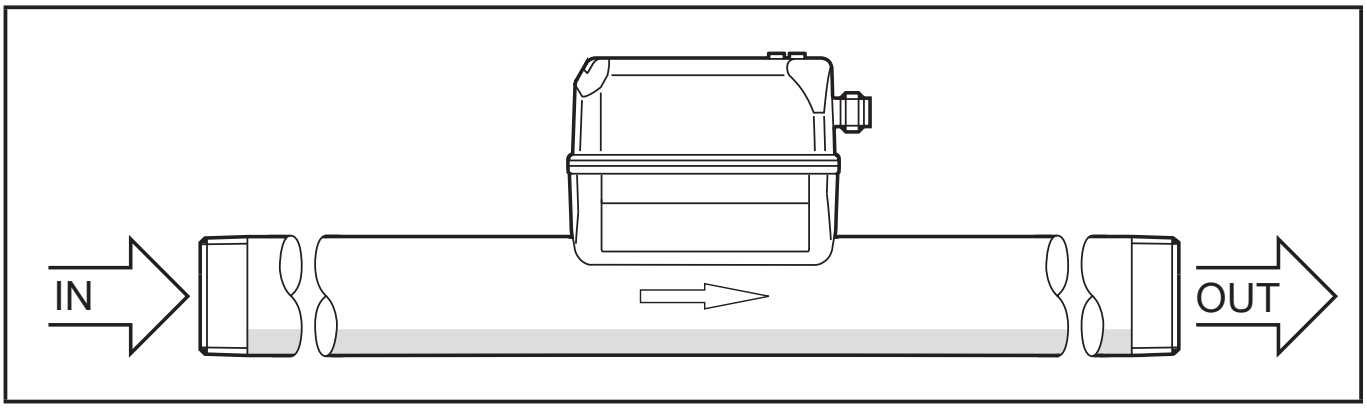

▶ Tighten both adapters in opposite direction by applying the defined tightening torque:

Type	Tightening torque
0555 6451; 0555 6452	100 Nm
0555 6453; 0555 6454	150 Nm

5 Electrical connection

The device must be connected by a qualified electrician. Voltage supply according to EN 50178, SELV, PELV.

▶ Disconnect power.

▶ Connect the unit as follows:

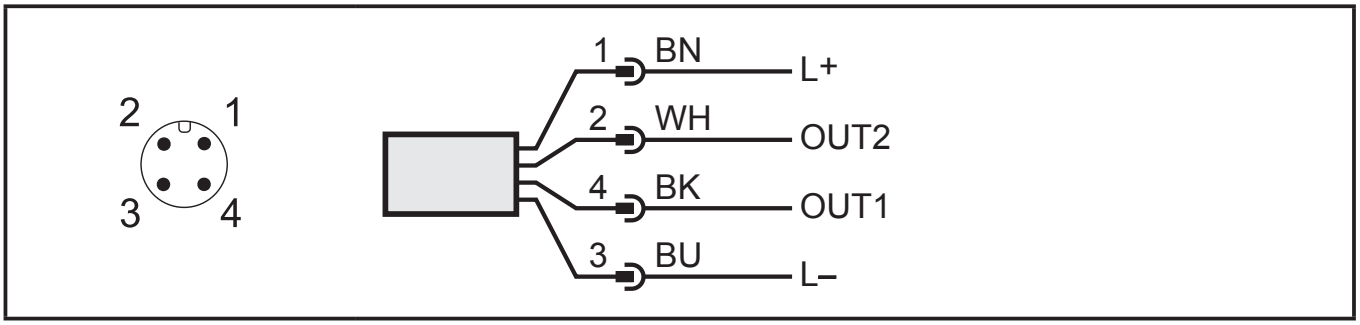

Colours to DIN EN 60947-5-2
BK: black; BN: brown; BU: blue; WH: white

Pin	Connection
4 (OUT1)	• analogue signal for volumetric flow • analogue signal for temperature • analogue signal for pressure • OFF
2 (OUT2)	• analogue signal for volumetric flow • analogue signal for temperature • analogue signal for pressure • OFF

6 Operating and display elements

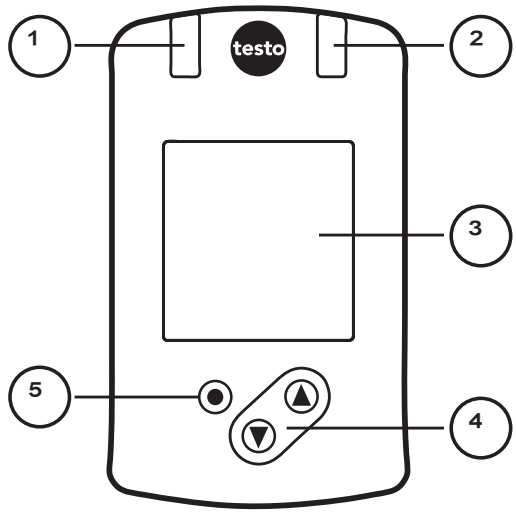

1 and 2: LEDs
Without function
3: TFT display
• Display of the current process values (volumetric flow quantity, temperature, pressure, totaliser) • Display of the parameters and parameter values
4: [▲] and [▼] buttons
• Select parameter • Change parameter value (hold button pressed) • Change of the display unit in the normal operating mode (RUN mode) • Lock / Unlock (buttons pressed simultaneously > 10 seconds)
5: [●] = Enter button
• Change from the RUN mode to the main menu • Change to the setting mode • Acknowledge the set parameter value

Display illumination:
- unit temperature > 70°C: brightness automatically reduced.
- unit temperature ≥ 100°C: display automatically switched off.

7 Menu

7.1 Process value display (RUN)

It is possible to select three process value indications during operation:

▶ Press [▲] or [▼].

> The display changes between the standard indication and two other views.

> After 30 s, the device returns to the standard display.

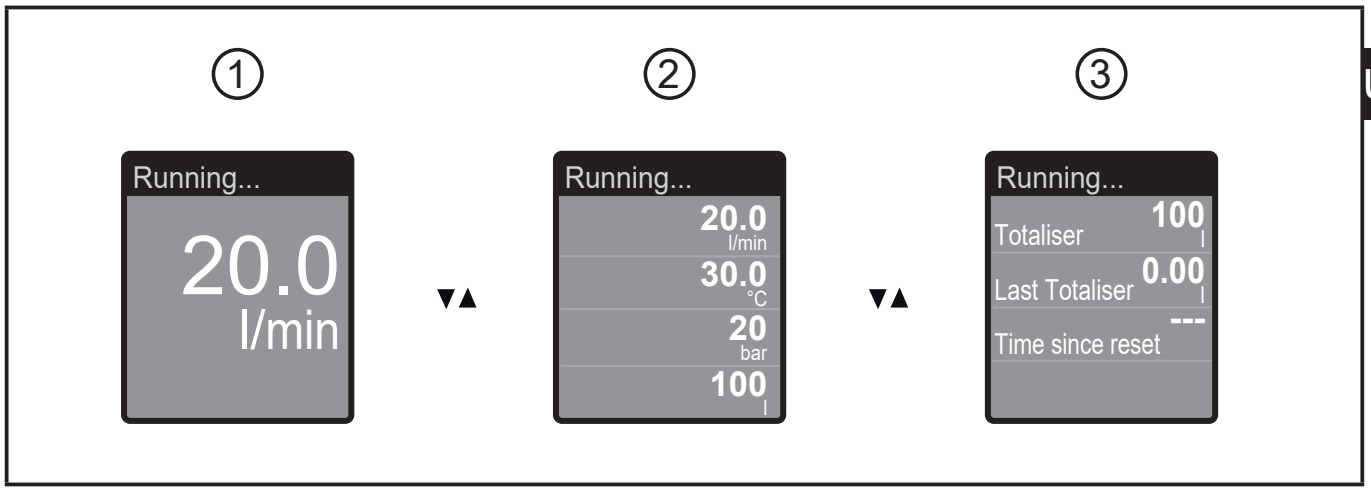

1: standard display as set under [diS.L] (→ 9.6.1)
2: overview of all process values
3: overview totaliser values

UK

7.2 Main menu and Extended functions (EF)

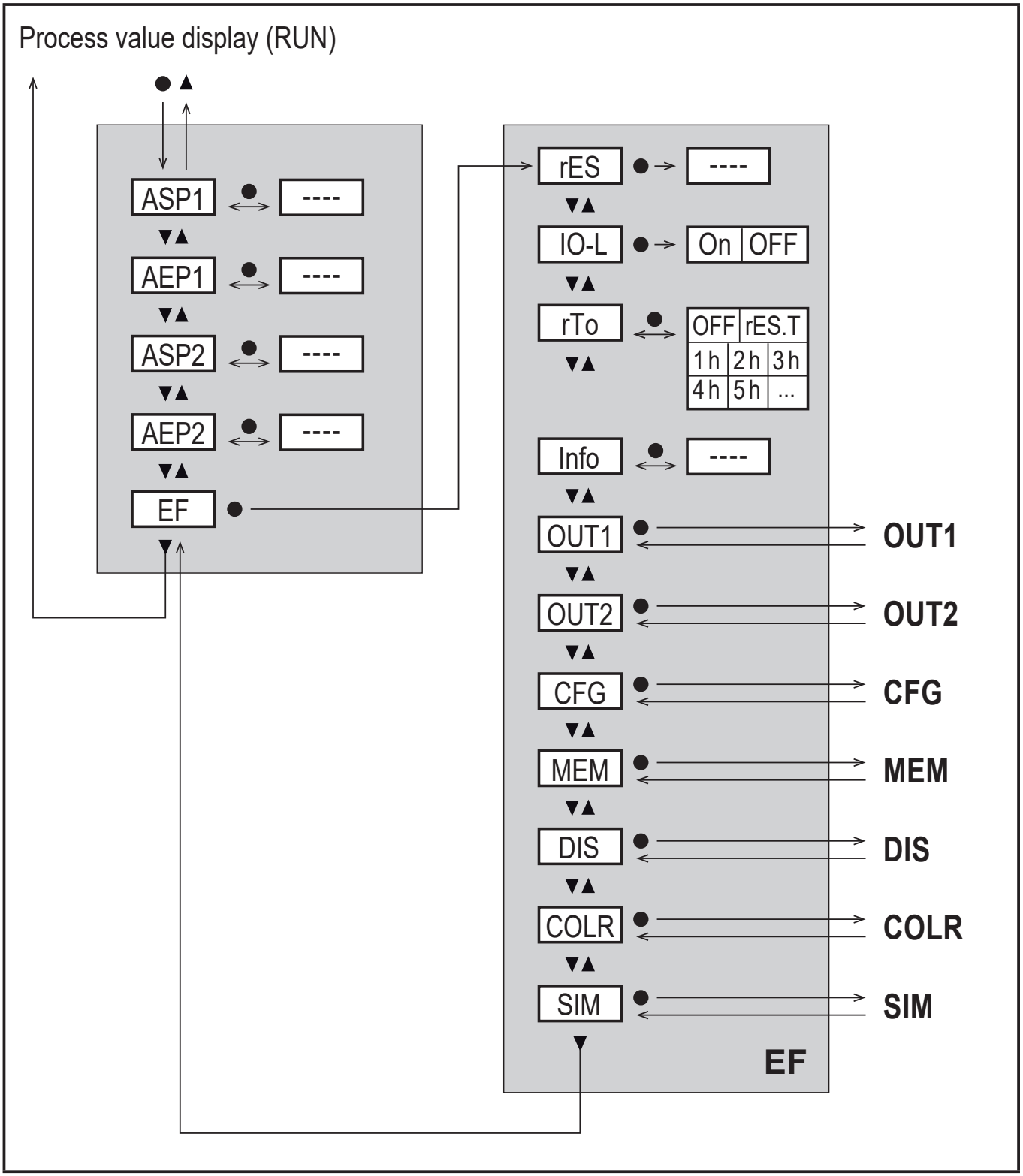

7.3 Submenu OUT1, OUT2, CFG

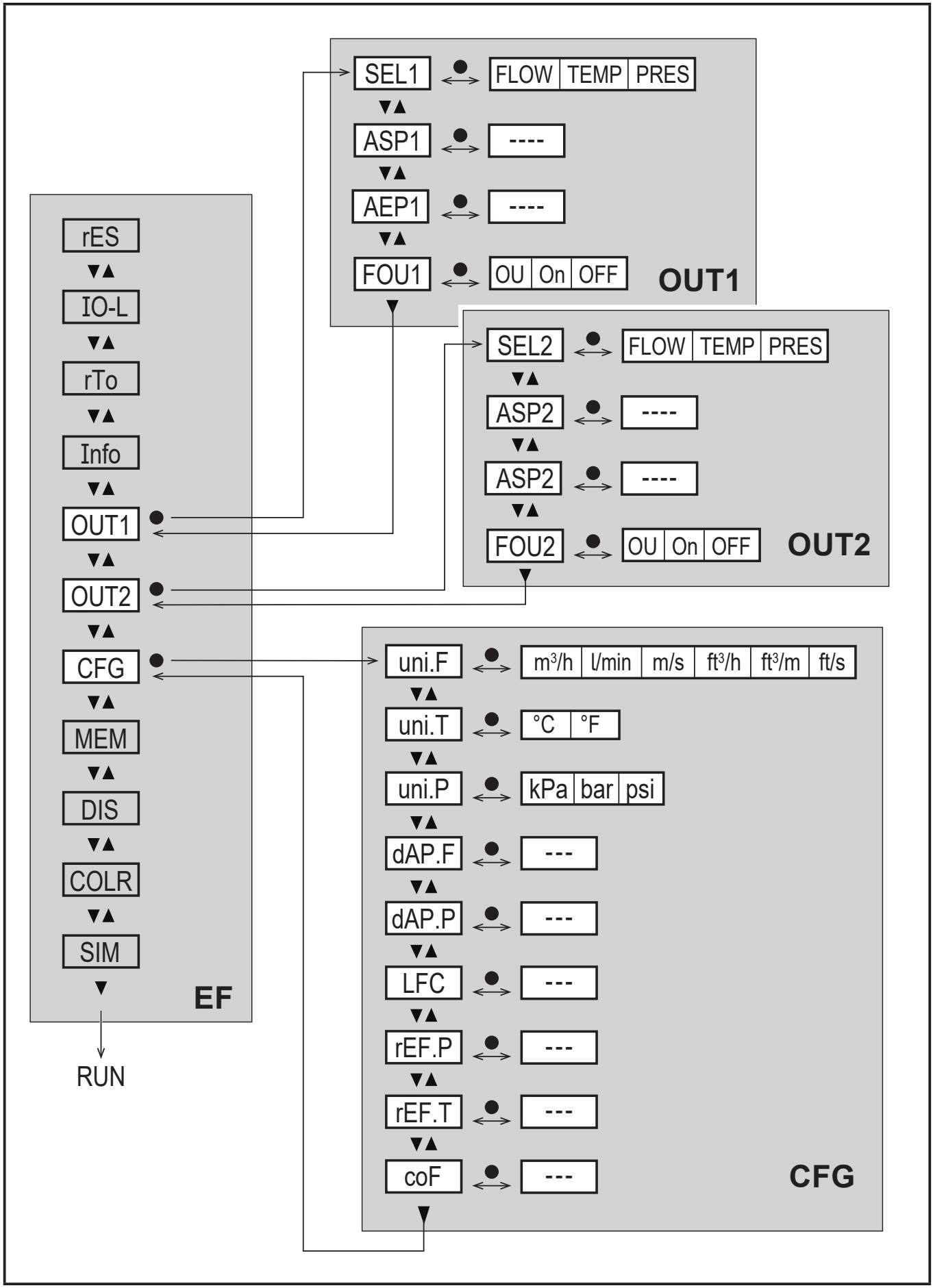

UK

7.4 Submenu MEM, DIS

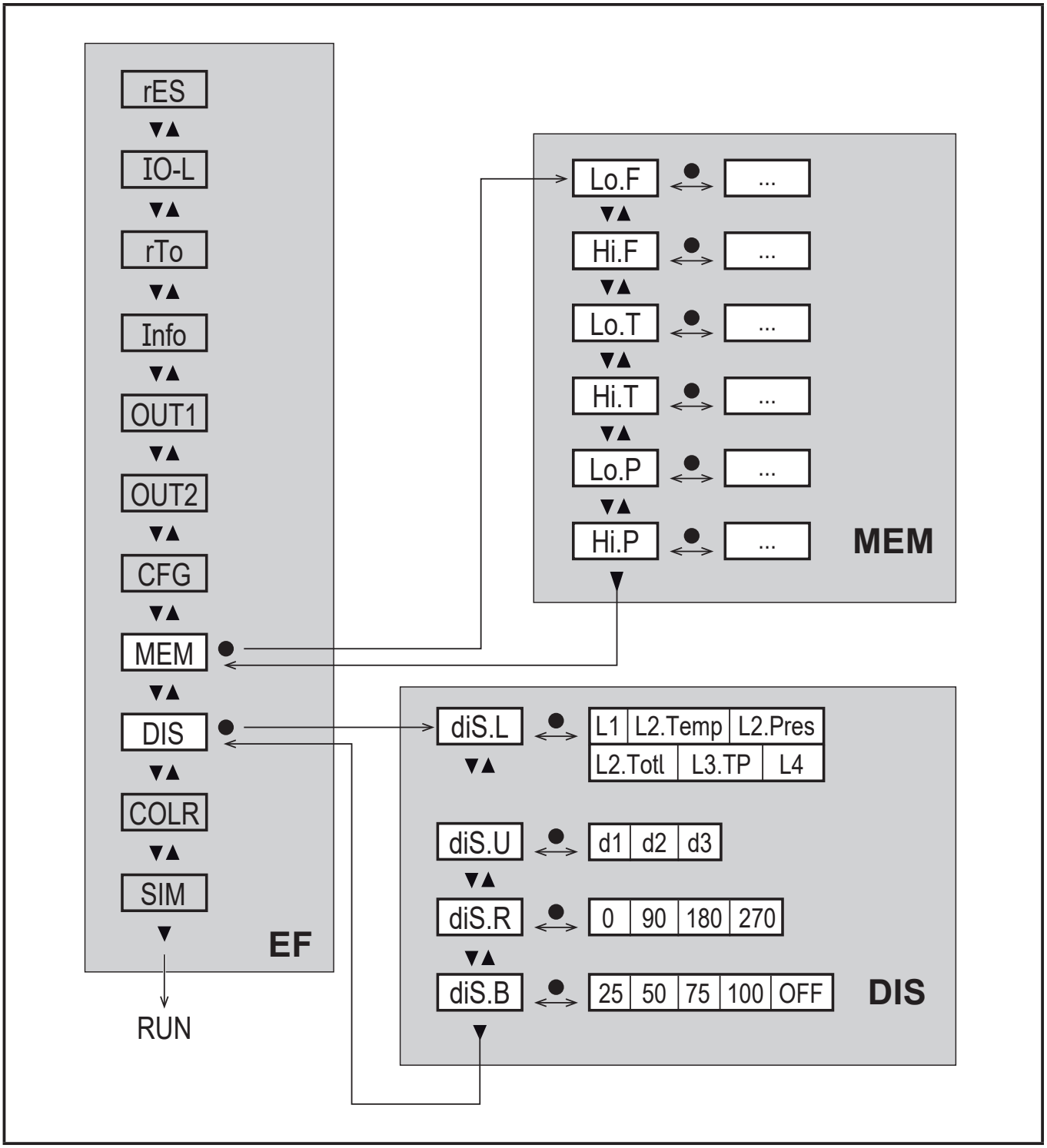

7.5 Submenu COLR, SIM

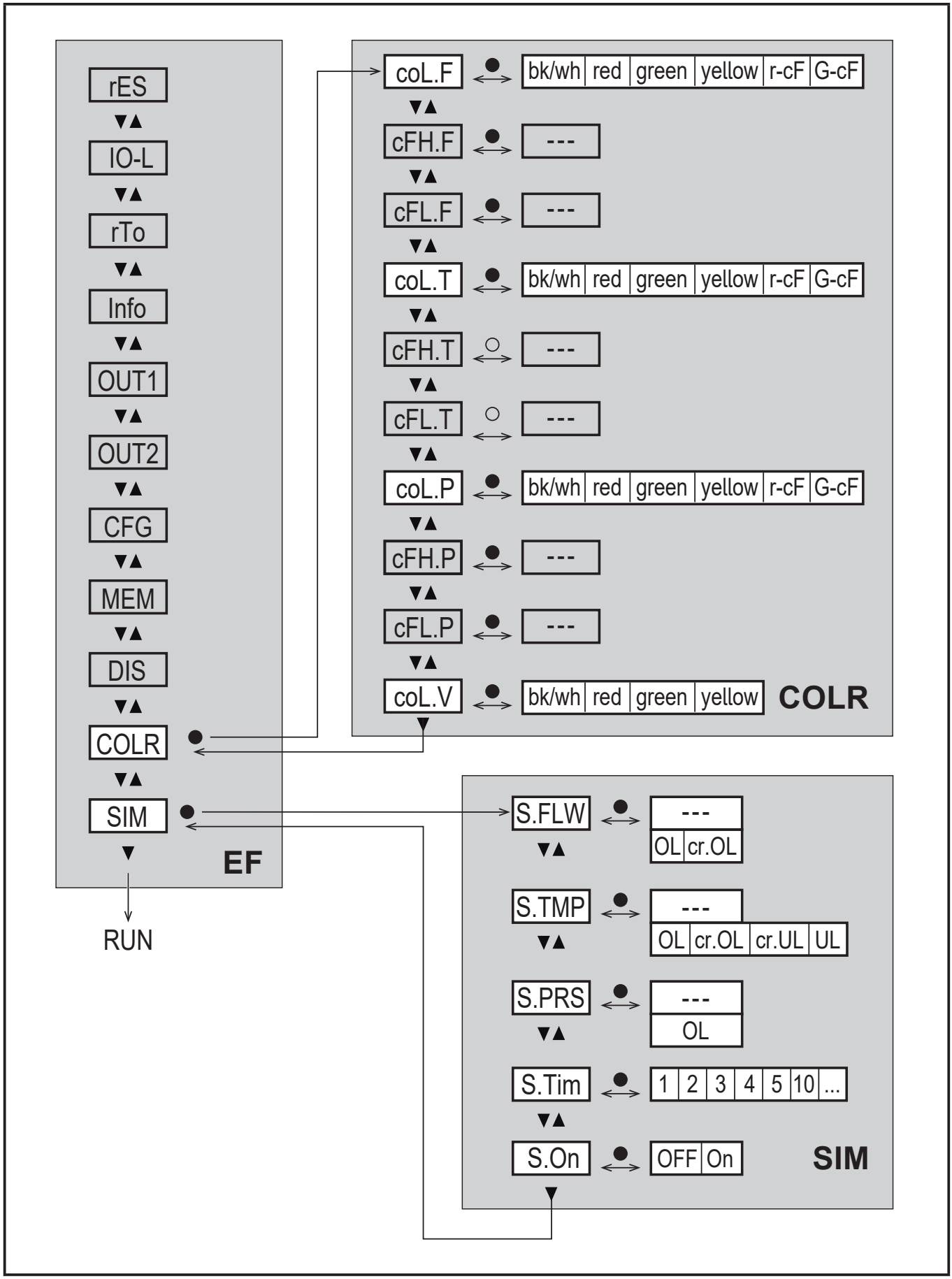

UK

7.6 Explanation of the menu

7.6.1 Submenu OUT1 and OUT2

Parameter	Explanation and setting options
SELx	standard unit of measurement for evaluation by OUTx: FLOW (volumetric flow) or TEMP (temperature) or PRES (pressure)
ASPx	analogue start point for OUTx
AEPx	analogue end point for OUTx
FOUx	response of OUTx in case of an internal fault: OU = analogue signal goes to 21.5 mA in case of a pressure measurement error and to 3.5 mA in case of a flow or temperature measurement error. On = analogue signal goes to 21.5 mA. OFF = analogue signal goes to 3.5 mA.

7.6.2 Submenu CFG

Parameter	Explanation and setting options
uni.F	standard unit of measurement for volumetric flow
uni.T	standard unit of measurement for temperature
uni.P	standard unit of measurement for pressure
dAP.F	measured value damping for volumetric flow
dAP.P	measured value damping for pressure
LFC	low flow cut-off
rEF.P	standard pressure to which the measured and display values for volumetric flow refer
rEF.T	standard temperature to which the measured and display values for volumetric flow refer
coF	Zero-point calibration for pressure measurement. The internal measured value "0" is shifted by this value.

7.6.3 Submenu MEM

Parameter	Explanation and setting options
Lo.F	min. value of the flow volume measured in the process
Hi.F	max. value of the flow volume measured in the process
Lo.T	min. value of the temperature measured in the process

Parameter	Explanation and setting options
Hi.T	max. value of the temperature measured in the process
Lo.P	min. value of the pressure measured in the process
Hi.P	max. value of the pressure measured in the process

7.6.4 Submenu DIS

Parameter	Explanation and setting options
diS.L	standard process value display L1 = current process value for volumetric flow L2.Temp = current process value for flow and temperature L2.Pres = current process value for volumetric flow and pressure L2.Totl = current process value for volumetric flow and totaliser L3.TP = current process value for volumetric flow and temperature and pressure L4 = current process value for volumetric flow and temperature and pressure and current totaliser value
diS.U	update rate of display d1 = high d2 = medium d3 = low
diS.R	display rotation: 0°, 90°, 180°, 270°
diS.B	display brightness: 25 %, 50 %, 75 %, 100 %, OFF (measured value display in the RUN mode switched off)

UK

7.6.5 Submenu COLR

Parameter	Explanation and setting options
coL.F	colour of the characters in the display for the flow rate value
cFH.F	upper limit of the colour change for flow rate measurement
cFL.F	lower limit of the colour change for flow rate measurement
coL.T	colour of the characters in the display for the temperature value
cFH.T	upper limit of the colour change for temperature measurement
cFL.T	lower limit of the colour change for temperature measurement
coL.P	colour of the characters in the display for the pressure value
cFH.P	upper limit of the colour change for pressure measurement
cFL.P	lower limit of the colour change for pressure measurement

Parameter	Explanation and setting options
coL.V	colour of the characters in the display for the totaliser value
bk/wh	permanently black/white
yellow	permanently yellow
green	permanently green
red	permanently red
r-cF	display colour between limits cFL...cFH red, outside green.
G-cF	display colour between limits cFL...cFH green, outside red.

7.6.6 Submenu SIM

Parameter	Explanation and setting options
S.FLW	simulated flow coefficient
S.TMP	simulated temperature value
S.PRS	simulated pressure value
cr.UL	measured value below the detection zone → error message
UL	measured value below the display range → warning
OL	measured value above the display range → warning
cr.OL	measured value above the detection zone → error message
S.Tim	simulation time in minutes
S.On	simulation status: OFF, On

8 Set-up

After power on and expiry of the power-on delay time of approx. 1 s, the unit is in the Run mode (= normal operating mode). It carries out its measurement and evaluation functions and generates output signals according to the set parameters.

During the power-on delay time the output signal is at 20 mA.

9 Parameter setting

CAUTION

If the medium temperature is above 50 °C (122 °F), parts of the housing can increase in temperature to over 65 °C (149 °F).

> Risk of burns

▶ Do not touch the device with your hands.

▶ Use another object (e.g. a ballpoint pen) to carry out settings on the unit.

UK

Parameters can be set before installation and set-up of the unit or during operation.

If you change parameters during operation, this will influence the function of the plant.

▶ Ensure that there will be no malfunctions in your plant.

During parameter setting the unit remains in the operating mode. It continues to monitor with the existing parameter until the parameter setting has been completed.

9.1 Parameter setting in general

1. Change from the RUN mode to the main menu	[●]
2. Select the requested parameter	[▲] or [▼]
3. Change to the setting mode	[●]
4. Change the parameter value	[▲] or [▼] > 1 s
5. Acknowledge the set parameter value	[●]
6. Return to the RUN mode	> 30 seconds (timeout)

9.1.1 Select submenu

1. Press [●] to change from the process value display to the main menu.
2. Press [▼] to select the menu EF and press [●].
3. Press [▼] to select the submenu and press [●].

9.1.2 Change to the process value display (RUN mode)

There are 2 possibilities:

1. Wait for 30 seconds (→ 9.1.4 Timeout).
2. Press [▲] or [▼] to go to the end of the menu and change to the next higher menu.

9.1.3 Lock / unlock

The unit can be locked electronically to prevent unintentional settings. On delivery: not locked.

Locking:

▶ Make sure that the unit is in the normal operating mode.

▶ Press [▲] and [▼] simultaneously for 10 s until [🔒 Set Menu lock] is displayed.

During operation: [🔒Lock via key] is displayed if you try to change parameter values.

Unlocking:

▶ Make sure that the unit is in the normal operating mode.

▶ Press [▲] and [▼] simultaneously for 10 s until [Reset menu lock] is displayed.

9.1.4 Timeout

If no button is pressed for 30 s during parameter setting, the unit returns to the operating mode with unchanged values.

9.2 Settings for volumetric flow monitoring

9.2.1 Analogue signal volumetric flow OUT1 or OUT2

▶ Select [SELx] and set FLOW. ▶ Select [ASPx] and set the value at which 4 mA is provided. ▶ Select [AEPx] and set the value at which 20 mA is provided.	Menu OUTx: [SELx] [ASPx] [AEPx]

9.3 Settings for consumed quantity monitoring

9.3.1 Manual counter reset

▶ Select [rTo] and set rES.T. > The totaliser is reset to zero.	Menu EF: [rTo]

9.3.2 Time-controlled counter reset

▶ Select [rTo] and set the requested value (intervals of hours, days or weeks). > The totaliser is reset automatically with the value now set.	Menu EF: [rTo]

9.3.3 Deactivation of the counter reset

▶ Select [rTo] and set OFF. > The totaliser is only reset after overflow.	Menu EF: [rTo]

UK

9.4 Settings for temperature monitoring

9.4.1 Analogue signal temperature OUT1 or OUT2

▶ Select [SELx] and set TEMP. ▶ Select [ASPx] and set the value at which 4 mA is provided. ▶ Select [AEPx] and set the value at which 20 mA is provided.	Menu OUTx: [SELx] [ASPx] [AEPx]

9.5 Settings for pressure monitoring

9.5.1 Analogue signal pressure OUT1 or OUT2

▶ Select [SELx] and set PRES. ▶ Select [ASPx] and set the value at which 4 mA is provided. ▶ Select [AEPx] and set the value at which 20 mA is provided.	Menu OUTx: [SELx] [ASPx] [AEPx]

9.6 User settings (optional)

9.6.1 Standard display

▶ Select [diS.L] and set process value display: - L1 = current process value for volumetric flow - L2.Temp = current process value for flow and temperature - L2.Pres = current process value for volumetric flow and pressure - L2.Totl = current process value for volumetric flow and totaliser - L3.TP = current process value for volumetric flow and temperature and pressure - L4 = current process value for volumetric flow and temperature and pressure and current totaliser value ▶ Select [diS.U] and set refresh rate of the display: - d1 = high - d2 = medium - d3 = low ▶ Select [diS.R] and set the orientation of the display: 0°, 90°, 180°, 270° ▶ Select [diS.B] and set the brightness of the display: 25 %, 50 %, 75 %, 100 % or OFF (= energy-saving mode. The display is switched off in the operating mode. Error messages are displayed even if the display is deactivated. Display activation by pressing any key.)	Menu DIS: [diS.L] [diS.U] [diS.R] [diS.B]

9.6.2 Standard unit of measurement for volumetric flow

▶ Select [uni.F] and set unit of measurement for standard display (→ 7.1): m^3/h, l/min, m/s, ft^3/h ft^3/min, ft/s. ℹ The consumed quantity (meter reading) is automatically displayed in the unit of measurement providing the highest accuracy.	Menu CFG: [uni.F]

9.6.3 Standard unit of measurement for temperature

▶ Select [uni.T] and set unit of measurement for standard display (→ 7.1): °C or °F	Menu CFG: [uni.T]

9.6.4 Standard unit of measurement for pressure

▶ Select [uni.P] and set unit of measurement for standard display (→ 7.1): kPa, bar, psi.	Menu CFG: [uni.P]

9.6.5 Measured value damping

▶ Select [dAP.F] for flow rate measurement or [dAP.P] for pressure measurement and set damping constant in seconds (τ value 63 %).	Menu CFG: [dAP.x]

9.6.6 Low flow cut-off

▶ Select [LFC] and set limit, below which a current is evaluated as standstill.	Menu CFG: [LFC]

9.6.7 Standard conditions

UK

▶ Select [rEF.P] and set the standard pressure. ▶ Select [rEF.T] and set the standard temperature.	Menu CFG: [rEF.P] [rEF.T]

9.6.8 Zero-point calibration pressure

▶ Select [coF] and set value in bar. > The internal measured value "0" is shifted by this value.	Menu CFG: [coF]

9.6.9 Colour of the characters in the display

▶ Select [coL.F] for volumetric flow or [coL.T] for temperature or [col.P] for pressure and set the colour of the characters for the process value in the standard display: - bk/wh = permanently black/white - yellow = permanently yellow - green = permanently green - red = permanently red - r-cF = display colour red between the limits cFL...cFH, outside colour change to green - G-cF = display colour green between the limits cFL...cFH, outside colour change to red ▶ Select [cFH.x] and [cFL.x] and set the limits for the colour window: - cFH.F = upper limit for volumetric flow - cFL.F = lower limit value for volumetric flow - cFH.T = upper limit value for temperature - cFL.T = lower limit value for temperature - cFH.P = upper limit for pressure - cFL.P = lower limit for pressure ▶ Select [coL.V] and set the colour of the characters for totaliser: - bk/wh = permanently black/white - yellow = permanently yellow - green = permanently green - red = permanently red	Menu COLR: [coL.x] [cFH.x] [cFL.x] [coL.V]

9.6.10 Error behaviour of the outputs OUT1 or OUT2

▶ Select [FOUx] and set error behaviour: - On = the analogue signal goes to the upper error value (→ 3.2) - OFF = the analogue value goes to the lower error value (→ 3.2) - OU = the analogue signal goes to 21.5 mA in case of a pressure measurement error and to 3.5 mA in case of a flow or temperature measurement error (→ 3.2)	Menu OUTx: [FOUx]

9.6.11 Restore factory setting

▶ Select [rES]. ▶ Briefly press [●]]. ▶ Keep [▲] or [▼] pressed. > [----] is displayed. ▶ Briefly press [●]. > The device carries out a reboot. ℹ → 13 Factory setting. We recommend taking down your own settings in that table before carrying out a reset.	Menu EF: [rES]

UK

9.7 Diagnostic functions

9.7.1 Read min/max values

▶ Select [Lo.x] or [Hi.x] to display the highest or lowest process value measured: - [Lo.F] = min. value of the flow volume measured in the process - [Hi.F] = max. value of the flow volume measured in the process - [Lo.T] = min. value of the temperature measured in the process - [Hi.T] = max. value of the temperature measured in the process - [Lo.P] = min. value of the pressure measured in the process - [Hi.P] = max. value of the pressure measured in the process Delete memory: ▶ Select [Lo.x] or [Hi.x]. ▶ Keep [▲] and [▼] pressed. > [----] is displayed. ▶ Briefly press [●]]. ℹ It is recommended to delete the memories as soon as the unit operates under normal operating conditions for the first time.	Menu MEM: [Lo.x] [Hi.x]

9.7.2 Simulation

▶ Select [S.FLW] and set the flow value to be simulated. ▶ Select [S.TMP] and set the temperature value to be simulated. ▶ Select [S.PRS] and set the pressure value to be simulated. ▶ Select [S.Tim] and set the time of the simulation in minutes. ▶ Select [S.On] and set the function: - On = The simulation starts. The values are simulated for the time set with [S.Tim]. Cancel by pressing any button. - OFF = The simulation is not active.	Menu SIM: [S.FLW] [S.TMP] [S.PRS] [S.Tim] [S.On]

10 Operation

The process values to be displayed permanently can be preset (→ 9.6.1 Standard display). A standard unit measurement can be defined for the flow rate measurement, the temperature measurement and the pressure measurement (→ 9.6.2 and → 9.6.3 and → 9.6.4).

In addition to the preset standard display, the display can be changed by pressing [▲] or [▼] → 7.1 Process value display (RUN).

11 Error correction

The unit has many self-diagnostic options. It monitors itself automatically during operation.

Warnings and error states are displayed, even when the display is switched off.

The status signals are classified according to NAMUR recommendation NE107.

If several diagnostic events occur simultaneously, only the diagnostic message of the result with the highest priority is displayed.

If one process value fails, the other process values continue to be available.

Process value line	Title line	Type	Descrip-tion	Output response	Error correc-tion
ERROR	ERROR	⊗	Unit faulty / malfunction	FOU	Replace device.
Off	Off	⊗	Supply voltage too low	Off	Check the supply voltage. Change [diS.B] setting (→ 9.6.1).
PArA	Parame-ter Error	⊗	Parameter setting outside the valid range	FOU	Repeat parameter setting.
ERROR	Pressure Error	⊗	Error in pressure meas-urement	FOU	Check pressure measure-ment. Replace device.
ERROR	Flow Error	⊗	Error in flow measurement	FOU	Check flow measurement. Replace device.
ERROR	Temp Error	⊗	Error in temperature meas-urement	FOU	Check temperature meas-urement. Replace device.
cr.OL	Critical over limit	⊗	Detection zone* exceeded	FOU	Check flow range / tem-perature range / pressure range.
cr.UL	Critical under limit	⊗	Detection zone* not reached	FOU	Check temperature range.
OL	Over limit	⚠	Detection zone* exceeded.	OU	Check flow range / tem-perature range / pressure range.
UL	Under limit	⚠	Detection zone* not reached	OU	Check flow range / tem-perature range / pressure range.
Lock via key	---	⚠	Setting buttons on the unit locked, parameter change rejected	OU	Unlock unit → 9.1.3

* Detection zone → 3.2, Figure 1.

⊗ Error — In the event of an error, the outputs react according to the setting under [FOU1] and [FOU2] (→ 9.6.10).

⚠ Warning

UK

12 Maintenance, repair and disposal

As a rule, no measures for maintenance are necessary.

▶ Define regular calibration intervals according to the process requirements. Recommendation: every 12 months.

Only the manufacturer is allowed to repair the unit.

▶ After use dispose of the unit in an environmentally friendly way in accordance with the applicable national regulations.

13 Factory setting

Menu	Parameter	Factory setting	User setting
EF	**rTo**	OFF	
OUT1	**SEL1**	TEMP	
	ASP1	0 %	
	AEP1	100 %	
	FOU1	OFF	
OUT2	**SEL2**	FLOW	
	ASP2	0 %	
	AEP2	100 %	
	FOU2	OFF	

Menu	Parameter	Factory setting	User setting
CFG	**uni.F**	m^3/h	
	uni.T	°C	
	uni.P	bar	
	dAP.F	0,6 s	
	dAP.P	0,06 s	
	LFC	0555 6451 0,1 m^3/h 0555 6452 0,3 m^3/h 0555 6453 0,5 m^3/h 0555 6454 2,0 m^3/h	
	rEF.P	1013 mbar	
	rEF.T	15 °C	
	coF	0	
DIS	**diS.L**	L3.TP	
	diS.U	d3	
	diS.R	0	
	diS.B	75	
COLR	**coL.F**	bk/wh	
	coL.T	bk/wh	
	coL.P	bk/wh	
	coL.V	bk/wh	

The percentage values refer to the final value of the measuring range (MEW).